US008010411B2

(12) **United States Patent**
Woodward et al.

(10) **Patent No.: US 8,010,411 B2**
(45) **Date of Patent: Aug. 30, 2011**

(54) **RESTRICTED PURCHASE OF REGULATED ITEMS OVER A NETWORK**

(75) Inventors: **Franklin Goodhue Woodward**, Orinda, CA (US); **James Connell Mills**, San Francisco, CA (US); **Randolph Ashton Hodge**, Mountain View, CA (US); **Andrew Karl Miller**, Los Altos, CA (US); **Joyo Wijaya**, Menlo Park, CA (US)

(73) Assignee: **IpVenture, Inc.**, Los Altos, CA (US)

(*) Notice: Subject to any disclaimer, the term of this patent is extended or adjusted under 35 U.S.C. 154(b) by 801 days.

(21) Appl. No.: **11/701,206**

(22) Filed: **Feb. 1, 2007**

(65) **Prior Publication Data**

US 2007/0136149 A1 Jun. 14, 2007

Related U.S. Application Data

(63) Continuation of application No. 09/813,235, filed on Mar. 19, 2001, now Pat. No. 7,308,423.

(51) **Int. Cl.**
G06Q 30/00 (2006.01)

(52) **U.S. Cl.** **705/26**; 705/27; 705/28

(58) **Field of Classification Search** ..... None
See application file for complete search history.

(56) **References Cited**

U.S. PATENT DOCUMENTS

2,781,643	A	2/1957	Fairweather
3,406,532	A	10/1968	Rownd et al.
3,670,867	A	6/1972	Traube
4,213,310	A	7/1980	Buss
4,530,067	A	7/1985	Dorr
4,656,591	A	4/1987	Goldberg
4,799,156	A	1/1989	Shavit et al.
4,803,348	A	2/1989	Lohrey et al.
4,823,984	A	4/1989	Ficken
4,887,208	A	12/1989	Schneider et al.
4,936,738	A	6/1990	Brennan
4,958,280	A	9/1990	Pauly et al.
5,038,283	A	8/1991	Caveney
5,093,794	A	3/1992	Howie et al.

(Continued)

FOREIGN PATENT DOCUMENTS

EP 0 425 405 A2 5/1991

(Continued)

OTHER PUBLICATIONS

"Blue Laws' Still Apply", Saccomano, Ann, Traffic World, Aug. 23, 1999, LOGISTICS, p. 15.*

(Continued)

Primary Examiner — M. Thein

(57) **ABSTRACT**

A technique is disclosed for implementing electronic commerce transactions via a data network. A regulated item selected by a customer is identified. The regulated item may correspond to an item which satisfies predetermined criteria, indicating that the regulated item is prohibited from being purchased by the customer. Action is then taken to prohibit the purchase of the selected item, via the data network, by the customer. According to one embodiment, the action taken to prohibit the purchase of the regulated item is automatically implemented at a server system configured to implement electronic commerce transactions between an on-line merchant and the customer. According to a specific implementation, the predetermined criteria correspond to regulations which restrict sales of the regulated items to persons in a particular jurisdiction based upon certain criteria such as, for example, time of day, day of week, age of the customer, type of product being sold, etc.

46 Claims, 8 Drawing Sheets

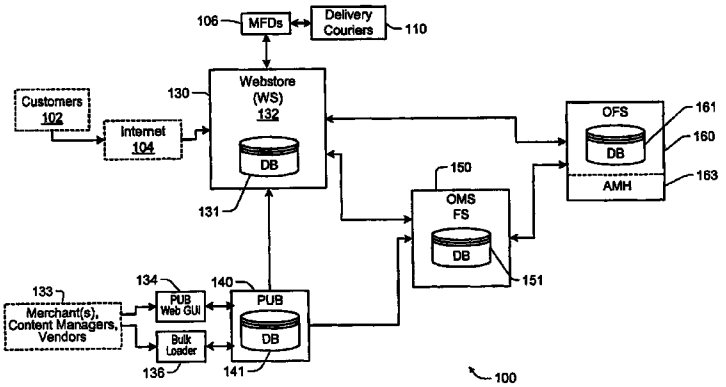

U.S. PATENT DOCUMENTS

5,101,352 A 3/1992 Rembert
5,105,627 A 4/1992 Kurita
5,113,349 A 5/1992 Nakamura et al.
5,122,959 A 6/1992 Nathanson et al.
5,235,819 A 8/1993 Bruce
5,237,158 A 8/1993 Kern et al.
5,246,332 A 9/1993 Bernard
5,265,006 A 11/1993 Asthana
5,272,638 A 12/1993 Martin et al.
5,273,392 A 12/1993 Bernard
5,322,406 A 6/1994 Pippin et al.
5,334,824 A 8/1994 Martinez
5,362,948 A 11/1994 Morimoto
5,363,310 A 11/1994 Haj-Ali Ahmadi et al.
5,395,206 A 3/1995 Cerny, Jr.
5,402,336 A 3/1995 Spiegelhoff et al.
5,428,546 A 6/1995 Shah et al.
5,434,394 A 7/1995 Roach et al.
5,444,844 A 8/1995 Inoue et al.
5,450,317 A 9/1995 Lu et al.
5,479,530 A 12/1995 Nair et al.
5,533,361 A 7/1996 Halpern
5,535,407 A 7/1996 Yanagawa et al.
5,548,518 A 8/1996 Dietrich et al.
5,553,312 A 9/1996 Gattey et al.
5,568,393 A 10/1996 Ando et al.
5,592,378 A 1/1997 Cameron et al.
5,593,269 A 1/1997 Bernard
5,598,487 A 1/1997 Hacker et al.
5,615,121 A 3/1997 Babayev et al.
5,640,002 A 6/1997 Ruppert et al.
5,664,110 A 9/1997 Green et al.
5,666,493 A 9/1997 Wojcik et al.
5,687,322 A 11/1997 Deaton et al.
5,694,551 A 12/1997 Doyle et al.
5,710,887 A 1/1998 Chelliah et al.
5,712,989 A 1/1998 Johnson et al.
5,758,313 A 5/1998 Shah et al.
5,758,328 A 5/1998 Giovannoli
5,758,329 A 5/1998 Wojcik et al.
5,761,673 A 6/1998 Bookman et al.
5,768,139 A 6/1998 Pippin et al.
H1743 H 8/1998 Graves et al.
5,809,479 A 9/1998 Martin et al.
5,816,725 A 10/1998 Sherman et al.
5,826,242 A 10/1998 Montulli
5,826,825 A 10/1998 Gabriet
5,831,860 A 11/1998 Foladare et al.
5,832,457 A 11/1998 O'Brien et al.
5,834,753 A 11/1998 Danielson et al.
5,835,914 A 11/1998 Brim
5,839,117 A 11/1998 Cameron et al.
5,848,395 A 12/1998 Edgar et al.
5,878,401 A 3/1999 Joseph
5,880,443 A 3/1999 McDonald et al.
5,884,216 A 3/1999 Shah et al.
5,893,076 A 4/1999 Hafner et al.
5,894,554 A 4/1999 Lowery et al.
5,895,454 A 4/1999 Harrington
5,897,622 A 4/1999 Blinn et al.
5,897,629 A 4/1999 Shinagawa et al.
5,899,088 A 5/1999 Purdum
5,910,896 A 6/1999 Hahn-Carlson
5,918,213 A 6/1999 Bernard et al.
5,922,040 A 7/1999 Prabhakaran
5,943,652 A 8/1999 Sisley et al.
5,943,841 A 8/1999 Wunscher
5,949,776 A 9/1999 Mahany et al.
5,956,709 A 9/1999 Xue
5,960,411 A 9/1999 Hartman et al.
5,963,919 A 10/1999 Brinkley et al.
5,974,401 A 10/1999 Enomoto et al.
5,979,757 A * 11/1999 Tracy et al. 235/383
5,983,200 A 11/1999 Slotznick
5,987,377 A 11/1999 Westerlage et al.
5,991,739 A 11/1999 Cupps et al.
5,999,914 A 12/1999 Blinn et al.
6,003,015 A 12/1999 Kang et al.
6,006,100 A 12/1999 Koenck et al.
6,016,504 A 1/2000 Arnold et al.
6,023,683 A 2/2000 Johnson et al.
6,026,378 A 2/2000 Onozaki
6,058,417 A 5/2000 Hess et al.
6,061,607 A 5/2000 Bradley et al.
6,070,147 A 5/2000 Harms et al.
6,073,108 A 6/2000 Peterson
6,081,789 A 6/2000 Purcell
6,083,279 A 7/2000 Cuomo et al.
6,084,528 A 7/2000 Beach et al.
6,085,170 A 7/2000 Tsukuda
6,087,952 A 7/2000 Prabhakaran
6,088,648 A 7/2000 Shah et al.
6,094,642 A 7/2000 Stephenson et al.
6,101,481 A 8/2000 Miller
6,101,486 A 8/2000 Roberts et al.
6,115,690 A 9/2000 Wong
6,123,259 A 9/2000 Ogasawara
6,140,922 A 10/2000 Kakou
6,144,848 A 11/2000 Walsh et al.
6,157,945 A 12/2000 Balma et al.
6,167,380 A 12/2000 Kennedy et al.
6,167,382 A 12/2000 Sparks et al.
6,178,510 B1 1/2001 O'Connor et al.
6,182,053 B1 1/2001 Rauber et al.
6,185,625 B1 2/2001 Tso et al.
6,215,952 B1 4/2001 Yoshio et al.
6,233,543 B1 5/2001 Butts et al.
6,236,972 B1 5/2001 Shkedy
6,236,974 B1 5/2001 Kolawa et al.
6,249,773 B1 6/2001 Allard
6,249,801 B1 6/2001 Zisapel et al.
6,260,024 B1 7/2001 Shkedy
6,275,812 B1 8/2001 Haq et al.
6,289,260 B1 9/2001 Bradley et al.
6,292,784 B1 9/2001 Martin et al.
6,324,520 B1 11/2001 Walker et al.
6,332,334 B1 12/2001 Faryabi
6,341,269 B1 1/2002 Dulaney et al.
6,343,275 B1 1/2002 Wong
6,397,246 B1 5/2002 Wolfe
6,405,173 B1 6/2002 Honarvar et al.
6,424,947 B1 7/2002 Tsuria et al.
6,438,652 B1 8/2002 Jordan et al.
6,445,976 B1 9/2002 Ostro
6,453,306 B1 9/2002 Quelene
6,463,345 B1 10/2002 Peachey-Kountz et al.
6,463,420 B1 10/2002 Guidice et al.
6,484,150 B1 11/2002 Blinn et al.
6,490,567 B1 12/2002 Gregory
6,496,205 B1 12/2002 White et al.
6,505,093 B1 1/2003 Thatcher et al.
6,505,171 B1 1/2003 Cohen et al.
6,526,392 B1 2/2003 Dietrich et al.
6,530,518 B1 3/2003 Krichilsky et al.
6,549,891 B1 4/2003 Rauber et al.
6,567,786 B1 5/2003 Bibelnieks et al.
6,571,213 B1 5/2003 Altendahl et al.
6,578,005 B1 6/2003 Lesaint et al.
6,587,827 B1 7/2003 Hennig et al.
6,594,641 B1 7/2003 Southam
6,594,692 B1 7/2003 Reisman
6,595,342 B1 * 7/2003 Maritzen et al. 194/212
6,598,024 B1 7/2003 Walker et al.
6,598,027 B1 7/2003 Breen, Jr.
6,622,127 B1 9/2003 Klots et al.
6,654,726 B1 11/2003 Hanzek
6,697,964 B1 2/2004 Dodrill et al.
6,741,995 B1 5/2004 Chen et al.
6,748,318 B1 6/2004 Jones
6,748,418 B1 6/2004 Yoshida et al.
6,763,496 B1 7/2004 Hennings et al.
6,792,459 B2 9/2004 Elnozahy et al.
6,862,572 B1 3/2005 de Sylva
6,873,970 B2 3/2005 Showghi et al.
6,904,455 B1 6/2005 Yen
6,970,837 B1 11/2005 Walker et al.
6,975,937 B1 12/2005 Kantarjiev et al.

6,980,962	B1	12/2005	Arganbright et al.
6,990,460	B2	1/2006	Parkinson
7,010,501	B1	3/2006	Roslak et al.
7,028,187	B1	4/2006	Rosen
7,035,914	B1	4/2006	Payne et al.
7,040,541	B2	5/2006	Swartz et al.
7,085,729	B1	8/2006	Kennedy et al.
7,177,825	B1	2/2007	Borders et al.
7,197,547	B1	3/2007	Miller et al.
7,222,161	B2	5/2007	Yen et al.
7,233,914	B1	6/2007	Wijaya et al.
7,240,283	B1	7/2007	Paila et al.
7,251,612	B1	7/2007	Parker et al.
7,308,423	B1	12/2007	Woodward et al.
7,346,564	B1	3/2008	Kirklin et al.
7,383,233	B1	6/2008	Singh et al.
7,792,712	B2	9/2010	Kantarjiev et al.
2001/0013007	A1	8/2001	Tsukuda
2001/0016828	A1	8/2001	Philippe et al.
2001/0037229	A1	11/2001	Jacobs et al.
2001/0042021	A1	11/2001	Matsuo et al.
2001/0042050	A1	11/2001	Fletcher et al.
2001/0047285	A1	11/2001	Borders et al.
2001/0047310	A1	11/2001	Russell
2001/0049619	A1	12/2001	Powell et al.
2001/0049672	A1	12/2001	Moore
2002/0002513	A1	1/2002	Chiasson
2002/0004766	A1	1/2002	White
2002/0007299	A1	1/2002	Florence
2002/0010633	A1	1/2002	Brotherson
2002/0013950	A1	1/2002	Tomsen
2002/0038224	A1	3/2002	Bhadra
2002/0038261	A1	3/2002	Kargman et al.
2002/0049853	A1	4/2002	Chu et al.
2002/0050526	A1	5/2002	Swartz et al.
2002/0065700	A1	5/2002	Powell et al.
2002/0072994	A1	6/2002	Mori et al.
2002/0103724	A1	8/2002	Huxter
2002/0116279	A1*	8/2002	Nobilo 705/26
2002/0188530	A1	12/2002	Wojcik et al.
2002/0194084	A1	12/2002	Surles
2002/0194087	A1	12/2002	Spiegel et al.
2003/0045340	A1	3/2003	Roberts
2003/0065585	A1	4/2003	Satomi et al.
2003/0079227	A1	4/2003	Knowles et al.
2003/0119485	A1	6/2003	Ogasawara
2003/0233190	A1	12/2003	Jones
2004/0107125	A1	6/2004	Guheen et al.
2004/0236635	A1	11/2004	Publicover
2005/0027580	A1	2/2005	Crici et al.
2005/0144641	A1	6/2005	Lewis
2005/0261985	A1	11/2005	Miller et al.
2006/0085250	A1	4/2006	Kantarjiev et al.
2006/0142895	A1	6/2006	Waddington et al.
2007/0016463	A1	1/2007	Borders et al.
2007/0055580	A1	3/2007	Woodward et al.
2007/0112647	A1	5/2007	Borders et al.
2007/0162353	A1	7/2007	Borders et al.
2007/0174144	A1	7/2007	Borders et al.
2007/0250572	A1	10/2007	Paila et al.
2008/0015959	A1	1/2008	Kruglikov et al.
2009/0063439	A1	3/2009	Rauser et al.
2009/0150534	A1	6/2009	Miller et al.

FOREIGN PATENT DOCUMENTS

FR	2696722	4/1994
GB	2 265 032 A	9/1993
WO	WO99/07121	2/1999
WO	WO 99/09508	2/1999

OTHER PUBLICATIONS

"Peapod Interactive Grocery Shopping and Delivery Service Now Delivers Via the Internet", Press Release, peapod.com, Apr. 22, 1996, pp. 1-2.

Anupindi et al., "Estimation of Consumer Demand with Stock-Out Based Substitution: An Application to Vending Machine Product", Marketing Science, vol. 17, No. 4, 1998, pp. 406-423.

Automatic ID News, "20/20 Results Achieved with Technology Trio", Sep. 1995, p. 19.

Fynes, Brian, et al., The Impact of Electronic Data Interchange on Competitiveness in Retail Supply Chain, IBAR vol. 14, No. 2, pp. 16-28, 1993.

Hiroo Kawata, "Information Technology of Commercial Vehicles in the Japanese Parcel Service Business," Abstract No. XP-000560489, 1992, pp. 371-382.

Hyten, Todd, "Stop & Shop mulls online grocery store", Boston Business Journal (Boston, MA, US), Mar. 22, 1996, vol. 16, No. 6, p. 1.

Koster, Rene de, "Routing Orderpickers in a Warehouse: A Comparison Between Optimal and Heuristic Solutions," IIE Transactions, May 1998, vol. 30, No. 5, p. 469.

Maloney, David, "The New Corner Drugstore", Modern Materials Handling, May 1, 2000, vol. 55, No. 5, p. 58.

Norton, Tim R., "End-To-End Response-Time: Where to Measure?", Computer Measurement Group Conference Proceedings, CMG99 Session 423, Dec. 1999, pp. 1-9.

PC Foods, "Customer Service Agreement," printed from website: http://www.pcfoods.com, Abstract No. XP-002245026, 1999, pp. 1-2.

Pearce, Michael R. "From carts to clicks", Ivey Business Quarterly, Autumn 1998, vol. 63, No. 1, p. 69-71.

Sekita, Takashi, "The Physical Distribution Information Network in the Home-Delivery Business," Japan Computer Quarterly, Abstract No. XP-00.431194, 1990, pp. 23-32.

Smith et al., "Management of Multi-Item Retail Inventory Systems with Demand Substitution", Operations Research, vol. 48, No. 1, Jan.-Feb. 2000, pp. 50-64.

Towie, Henry, "On the Fast Track with Totaltracks: UPS Deploys Mobile Date Service," Abstract No. XP-000560076, Document Delivery World, vol. 9, No. 3, 1993, pp. 30-31.

Van Den Berg, Jeroen P., "A Literature Survey on Planning and Control of Warehousing Systems", IIE Transactions, Aug. 1999, vol. 31, No. 3, p. 751.

Vass et al., "The World Wide Web—Everything you (n)ever wanted to know about its server", IEEE, Oct./Nov. 1998, pp. 33-37.

Wilson, Joe, "Selecting Warehouse Management Software (WMS) for Food Distribution Operations", Frozen Food Digest, Oct. 1998, vol. 14, No. 1, p. 18.

Worth Wren Jr., Fort Worth Star-Telegram Texas, "Albertson's Expects Online Grocery Shopping to Boom", KRTBN Knight-Ridder Tribune Business News (Fort Worth Star-Telegram, Texas), Nov. 9, 1998.

Wunnava et al., "Interactive Mulitmedia on the World Wide Web", IEEE, Aug. 1999, pp. 110-115.

www.peapod.com, including Introduction to Peapod; How Peapod Works; Peapod: Choosing a Delivery Time; Peapod: Sending Your Order; Retrieved from Internet Archive (web.archive.org) on Jul. 23, 2006, alleged date Nov. 13, 1996, pp. 1-9.

U.S. Appl. No. 09/568,570, filed May 10, 2000.

U.S. Appl. No. 09/568,571, filed May 10, 2000.

U.S. Appl. No. 09/568,603, filed May 10, 2000.

U.S. Appl. No. 09/568,613, filed May 10, 2000.

U.S. Appl. No. 09/568,614, filed May 10, 2000.

U.S. Appl. No. 09/568,823, filed May 10, 2000.

U.S. Appl. No. 09/620,199, filed Jul. 20, 2000.

U.S. Appl. No. 09/750,385, filed Dec. 27, 2000.

U.S. Appl. No. 09/792,400, filed Feb. 22, 2001.

U.S. Appl. No. 09/813,235, filed Mar. 19, 2001.

U.S. Appl. No. 11/594,669, filed Nov. 8, 2006.

Jaffe, Charles A. "Gas supplier takes timing seriously if deliveries are late, the product is free," The Morning Call, Allentown, PA, Feb. 5, 1989, pp. 1-4.

U.S. Appl. No. 11/818,010, filed Jun. 13, 2007.

U.S. Appl. No. 12/074,283, filed Mar. 3, 2008.

Alba et al., "Interactive home shopping: Consumer, retailer, and manufacturer incentives to participate in electronic marketplaces", Journal of Marketing, vol. 61, No. 3, Jul. 1, 1997, 18 pgs.

Bloch et al., "On the Road of Electronic Commerce—a Business Value Framework, Gaining Competitive Advantage and Some Research Issues", Mar. 1996, 20 pages.

Brown Janelle, "Pod People Peapod, the online grocery service, sounds great—but can it deliver?" Salon Media Group, Inc., Dec. 17, 1998, 3 pages.
Corcoran, Cathy, "The Skeptic's Guide to on-line shopping. Who has time to shop for groceries? So we gave Peapod a test run." The Patriot Ledger, Quincy, MA, Jul. 7, 1997, 4 pages.
Descartes Licenses Energy V6 Supply Chain Suite to Major Pepsi Bottler . . . News Release, Descartes Systems Group Inc., Waterloo Ontario, Aug. 27, 1998, 2 pages.
Dilger, Karen Abramic, "Warehouse Wonders", Manufacturing Systems, vol. 15, No. 2, Feb. 1, 1997, 4 pages.
Dyson et al., "Electronic Delivery without the Internet (Digital Delivery of Newspapers)", The Seybold Report on Publishing Systems, vol. 25, No. 1, ISBN: 0736-7260, Sep. 1, 1995, 9 pages.
Eckerson, Wayne, "Grocers put stock in EDI to streamline deliveries; New electronic data interchange systems offer a wealth of benefits for retailers and suppliers," Network World, Inc., Aug. 7, 1989, 2 pages.
First Stop—Main Menu, website tour, Peapod, http://web.archive.org/web/19961113150913/www.peapod.com/tour1.html, Nov. 13, 1996, 13 pages.
Frequently Asked Questions, webpages, Peapod, http://web.archive.org/web/19961113150832/www.peapod.com/question.html, Nov. 13, 1996, 2 pages.
"Here's How Peapod Works," webpages, Peapod, http://web.archive.org/web/19961113151243/www.peapod.com/work.html, Nov. 13, 1996, 2 pages.
"Installation and Shopping Tips for the Mac," Peapod Video, 1993, 1 page.
"Introduction to Peapod," webpages, Peapod, http://web.archive.org/web/19961113145506/www.peapod.com/intro.html, Nov. 13, 1996, 2 pages.
Ives et al., "The Information System as a Competitive Weapon", Communications of the ACM, vol. 27, No. 12, Dec. 1984. 9 pages.
Maeglin, Kathy, "Services Take the 'Shop' Out of Shopping for Groceries", The Capital Times, Mar. 20, 1997, 2 pages.
Mai et al., "Consumers' Perceptions of Specialty Foods and the Rural Mail Order Business", 52nd EAAE Seminar—Parma, Jun. 19-21, 1997, pp. 331-348.
Malone et al., "Computers, Networks, and The Corporation," Center for Information Systems Research, MIT, Aug. 1991, 14 pages.
Marsh, Barbara, "Peapod's On-Line Grocery Service Checks Out Success—Customers Shop Electronic Aisles; Finicky Workers Sack the Goods", The Wall Street Journal, Jun. 30, 1994, 2 pages.
Meeker et al., The Internet Retailing Report, U.S. Investment Research, Morgan Stanley, May 28, 1997, 241 pages.
Menzies, David, "Checking out the aisles by computer: Cori Bonina, General Manager of Stong's market in Vancouver, has made a virtual success of a meat-and-potatoes business", National Post, Dec. 1, 1998, 2 pages.
"More Information," webpages, Peapod http://web.archive.org/web/19961113145540/www.peapod.com/more.html, Nov. 13, 1996, 2 pages.
"Online Groceries, A Quicker Shopping Cart?" E-Commerce Customers—What, Where and Why They Buy, Standard Media Inc. and Odyssey, LP, Spring 2000, 19 pages.
Patterson, Rebecca H., "No Lines at Britain's First On-Line Grocery Store, but You Still May Wait", The Wall Street Journal Europe, Jul. 25, 1997, 3 pages.
Peapod, Inc., Telephone Grocery Shopping Guide, Aug. 7, 1992, 3 introductory pages and pp. 1-12.
Podmolik, Mary Ellen, "Groceries Seeing Green From Computer Shopping", Chicago Sun-Times, May 8, 1996, 1 page.
Poirier, Charles et al., Supply Chain Optimization, Building the Strongest Total Business Network, Berrett-Koehler Publishers, San Francisco, Copyright 1996, 30 pages.
Purpura, Linda, "Getting to House from Order Smooth Transitions from Order, To Pick, To Pack, To Delivery, are a Vital Part of a Successful Home-Shopping Program", Supermarket News, Oct. 6, 1997, 2 pages.
Reynolds, Janice, "Logistics and Fulfillment for E-Business", ISBN: 1-57820074-1, 2001, 60 pages.
"Shopping-Virtually Hassle-Free", Computer Weekly, Apr. 10, 1997, 2 pages.
Smart Shopping for Busy People, webpage, Peapod, http://web.archive.org/web/19961113145048/www.peapod.com/ Nov. 11, 1996, 1 page.
User Manual, Peapod, Inc., Version 3.10, Aug. 7, 1992, 83 pages.
Van Mieghem, Jan A., "Peapod: Mass Customized Service", Kellogg School of Management, Northwestern University, Aug. 28, 2001 (Rev. Nov. 22, 2004), 13 pages.
Hoffman, Thomas, "New UPS CIO eyes cyberdelivery," Computerworld, Nov. 11, 1996, 30, 46; ABI/INFORM Global, p. 4.
Booker, et al. "Up in the air", Computerworld, Oct. 11, 1993; 27, 41; ABI/INFORM Global, p. 54.
"Imposing an Objective Viewpoint," Modern Purchasing, vol. 36, Iss. 3, Mar. 1994, pp. 1-4.
"New Medium, new message," The Economist, vol. 329, Iss. 7834, Oct. 23, 1993, p. S 16, pp. 1-5.
"Numetrix Unveils xtr@; an Internet-Designed Solution for Real-Time Supply Chain Collaboration," Business/Technology Editors, Business Wire, New York: Dec. 16, 1998, pp. 1-4.
Office Action for U.S. Appl. No. 09/813,235 dated Oct. 27, 2003.
Office Action for U.S. Appl. No. 09/813,235 dated Aug. 8, 2004.
Office Action for U.S. Appl. No. 09/813,235 dated Feb. 28, 2005.
Advisory Action for U.S. Appl. No. 09/813,235 dated Jun. 20, 2005.
Office Action for U.S. Appl. No. 09/813,235 dated Sep. 20, 2005.
Office Action for U.S. Appl. No. 09/813,235 dated Feb. 28, 2006.
Office Action for U.S. Appl. No. 09/813,235 dated May 1, 2006.
Office Action for U.S. Appl. No. 09/813,235 dated Aug. 14, 2006.
Notice of Allowance for U.S. Appl. No. 09/813,235 dated Oct. 5, 2006.
Office Action for U.S. Appl. No. 09/813,235 dated Nov. 21, 2006.
Notice of Allowance for U.S. Appl. No. 09/813,235 dated Aug. 24, 2007.
Office Action for U.S. Appl. No. 11/594,669 dated Jul. 28, 2009.
Notice of Allowance for U.S. Appl. No. 11/594,669 dated May 17, 2010.
Saccomano, Ann, "Blue Laws" Still Apply, Traffic World, LOGISTICS, p. 15, Aug. 23, 1999, 2 pages.
Parker, Rachel, "UPS Pioneers a cellular data network", InfoWorld, ABI/INFORM Global, Jun. 8, 1992, p. S59-S60.
Chandler, Susan. "The grocery cart in your PC," Business Week, Iss. 3441, 1995, p. 63, 2 pages.
eShopper: Resources for Web Buyeing. Savetz, Kevin; Gardiner, Peace, Computer Shopper, 19, 5, 280(1), May, 1999.
Dialog Search Results, re: U.S. Appl. No. 11/705,982 dated Sep. 13, 2010, pp. 1-54.

* cited by examiner

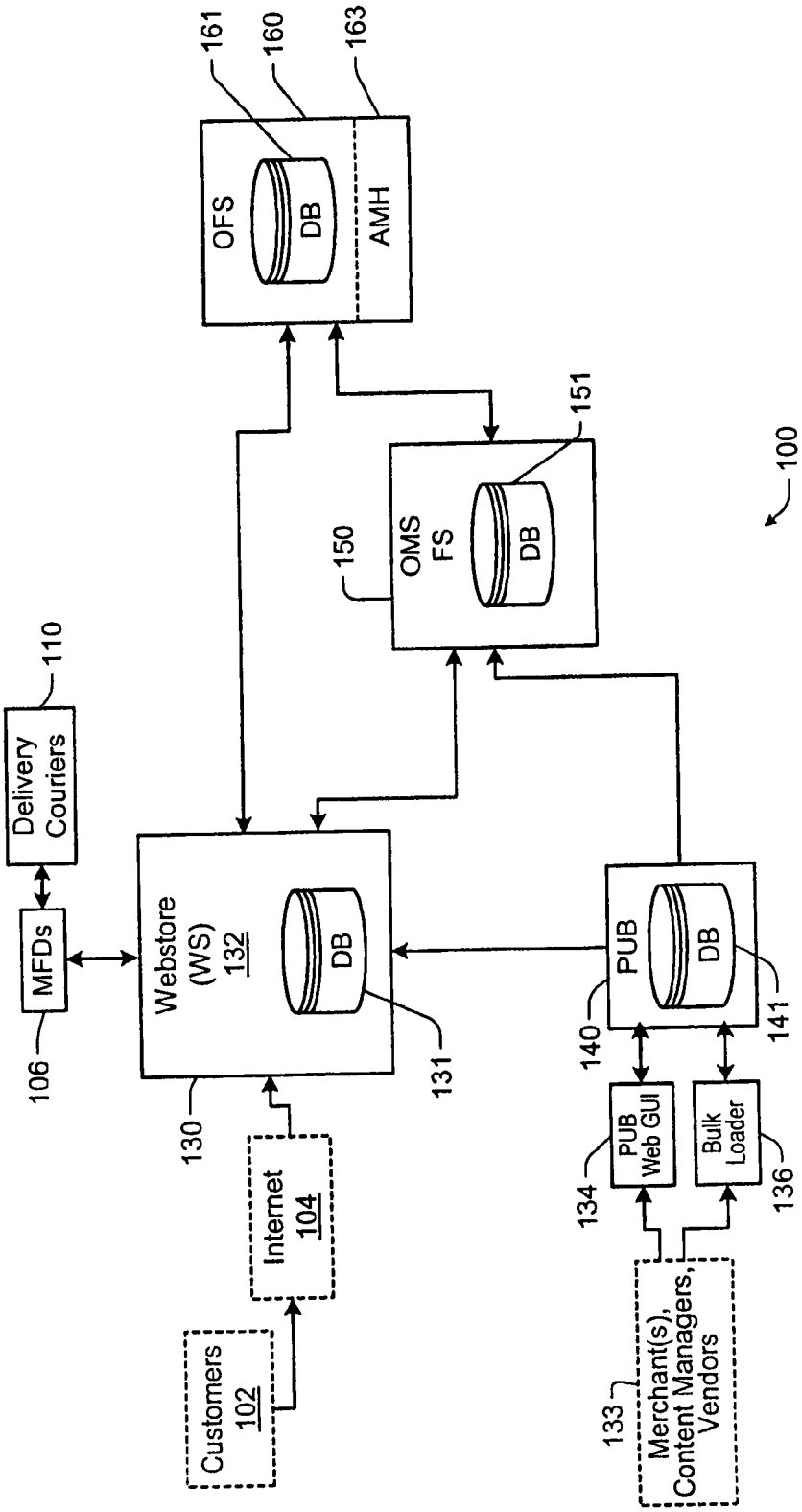
100
Customers 102
Internet 104
Webstore (WS) 132
DB
130
131
MFDs
106
Delivery Couriers
110
OMS FS
DB
150
151
OFS
DB
AMH
161
160
163
PUB
DB
140
141
PUB Web GUI
134
Bulk Loader
136
Merchant(s), Content Managers, Vendors
133

Fig. 1

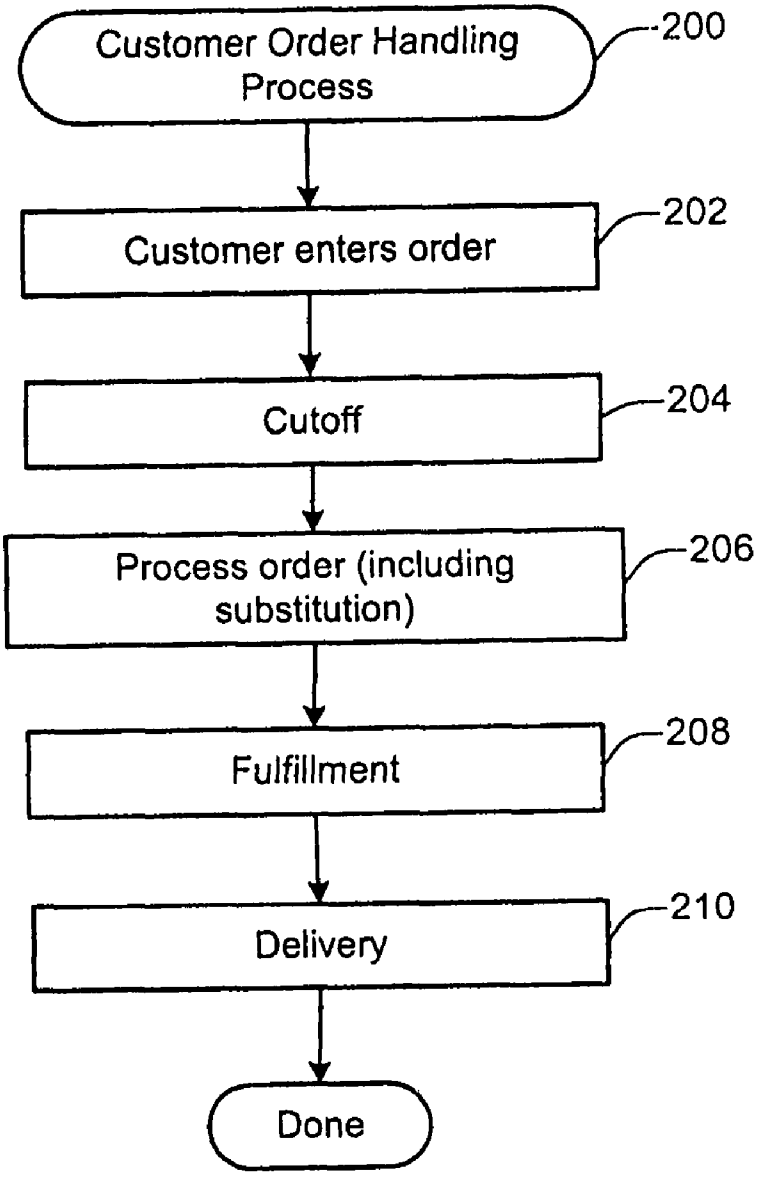
Customer Order Handling Process
200
Customer enters order
202
Cutoff
204
Process order (including substitution)
206
Fulfillment
208
Delivery
210
Done

Fig. 2

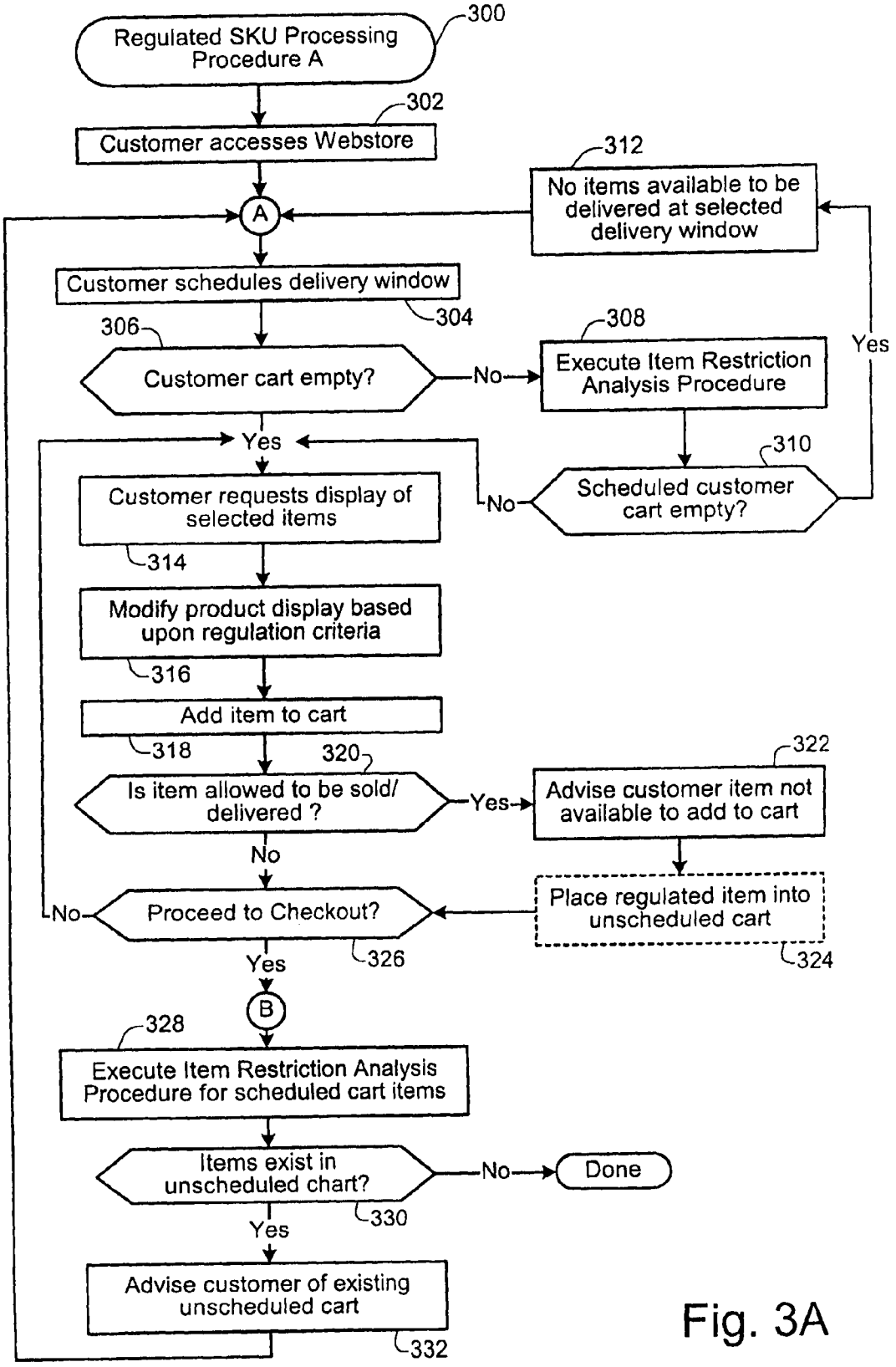
Regulated SKU Processing Procedure A
300
Customer accesses Webstore
302
A
No items available to be delivered at selected delivery window
312
Customer schedules delivery window
304
306
Customer cart empty?
No
Execute Item Restriction Analysis Procedure
308
Yes
Yes
Customer requests display of selected items
No
Scheduled customer cart empty?
310
314
Modify product display based upon regulation criteria
316
Add item to cart
318
320
Is item allowed to be sold/ delivered ?
Yes
Advise customer item not available to add to cart
322
No
No
Proceed to Checkout?
Place regulated item into unscheduled cart
326
324
Yes
B
328
Execute Item Restriction Analysis Procedure for scheduled cart items
Items exist in unscheduled chart?
No
Done
330
Yes
Advise customer of existing unscheduled cart
332

Fig. 3A

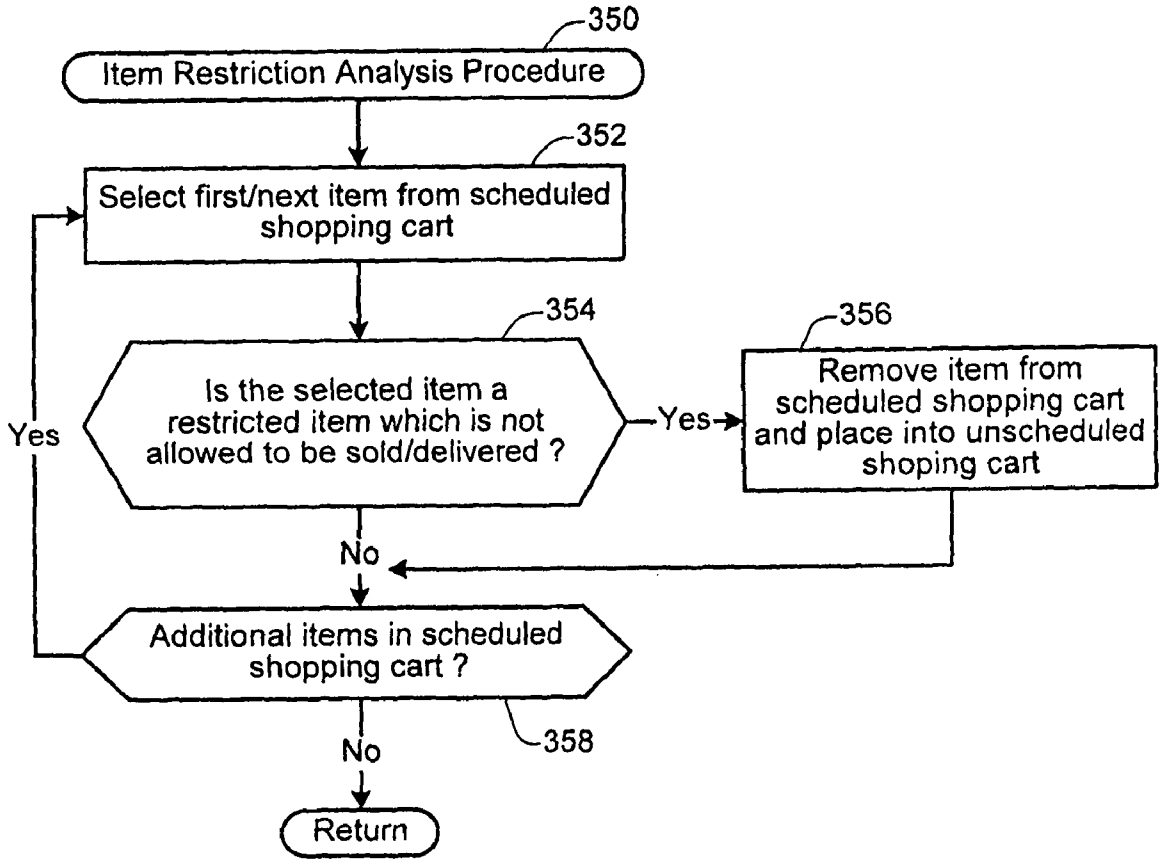
350
Item Restriction Analysis Procedure
352
Select first/next item from scheduled shopping cart
354
Is the selected item a restricted item which is not allowed to be sold/delivered ?
Yes
356
Remove item from scheduled shopping cart and place into unscheduled shoping cart
Yes
No
Additional items in scheduled shopping cart ?
358
No
Return

Fig. 3B

	402 DC Group	404 Zone	406 Sub Zone	408 Reg Code	410 Condition ID	412 Restriction ID	414 Age	416 Addr	418 Day	420 Time	422 Eff Date	424 Exp Date
401	All			A	Min Age	No checkout	21				3/15/00	
	All			A	Min Age	No leave	21				3/15/00	
403	All			T	Min Age	No checkout	18				3/15/00	
	All			T	Min Age	No leave	18				3/15/00	
	All			A	Hours	No delivery				12:01am-6am	3/15/00	
	All			A	Minimum Price	Min price retail					3/15/00	
405	ATL01			A	Min Age	No checkout	18				3/15/00	
	ATL01		All dry subzones	A	Dry del address	No delivery					3/15/00	
	ATL01			A	Day of week delivery	No delivery			Sunday		3/15/00	
	ATL01		Gwinet subzones	A	Hours	No delivery				12:01am - 7am	3/15/00	
407	ATL01			AD	No sales allowed	No item page					3/15/00	
409	ATL01			AD	No sales allowed	No item catalog					3/15/00	
	BAY01			DF	Minimum Price	Min price retail					3/15/00	

Fig. 4

400

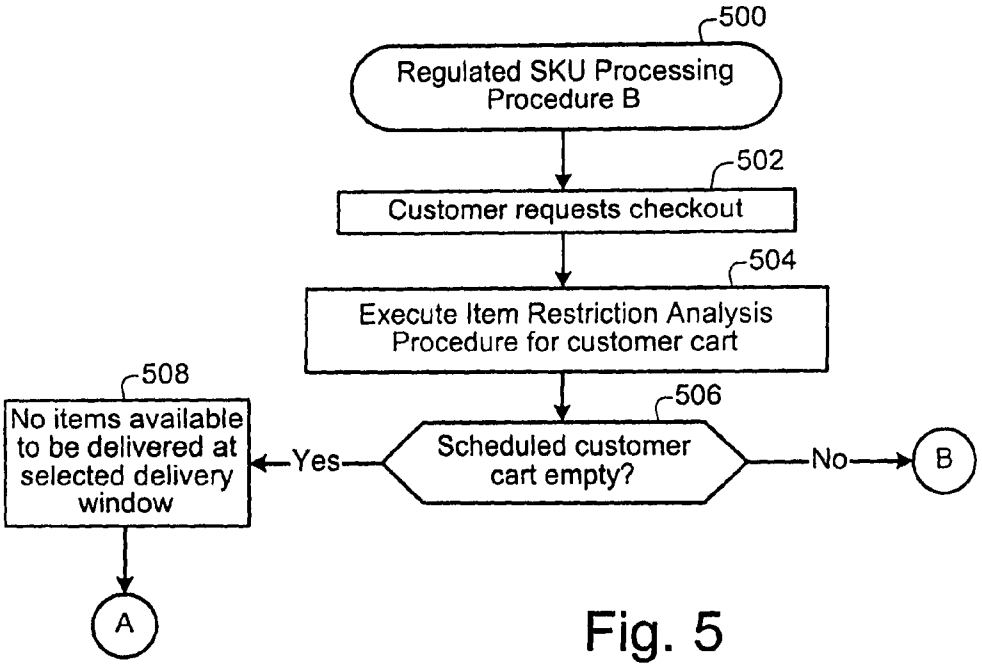
500
Regulated SKU Processing Procedure B
502
Customer requests checkout
504
Execute Item Restriction Analysis Procedure for customer cart
506
Scheduled customer cart empty?
Yes
No
B
508
No items available to be delivered at selected delivery window
A

Fig. 5

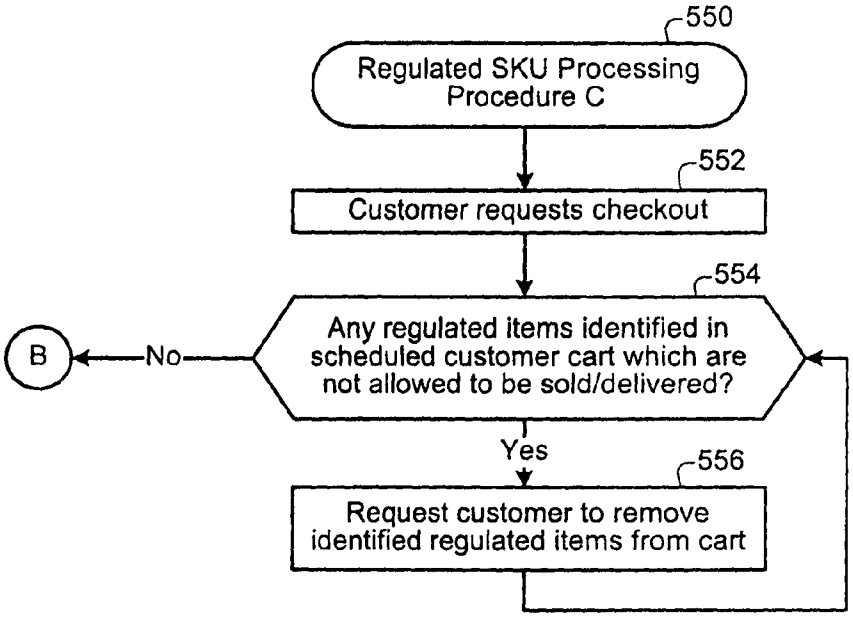
550
Regulated SKU Processing Procedure C
552
Customer requests checkout
554
Any regulated items identified in scheduled customer cart which are not allowed to be sold/delivered?
B
No
Yes
556
Request customer to remove identified regulated items from cart

Fig. 6

Fig. 7A

700

Condition ID (702)	Description (704)
Min Age	Under age
Dry del address	Delivery address is in a dry location
Day of week shopping	Specified day of week for shopping
Day of week delivery	Specified day of week for delivery
Hours	Specified hours of operation
Same state	Delivery and fulfilling address must be in same state
Minimum Price	Minimum price controls

Fig. 7B

750

Restriction ID (752)	Description (754)
No checkout	Do not checkout item
No delivery	Do not deliver to address
No leave	Do not leave item with recipient
No price	Do not display price
No item page	Do not display on item page
Min price retail	Do not price below retail
No item catalog	Do not include in a given DC item catalog
No Cart	Do not add to cart

Fig. 7C

770

Regulation Code (772)	Description (774)
A	Alcohol
AB	Beer
AB3	3.2% Beer
AD	Distilled spirits
AW	Wine
DF	Dairy - Fluid
I	Insignia
T	Tobacco
TCT	Cigarettes
TCG	Cigars
TPP	Pipe tobacco
NON	Not Regulated

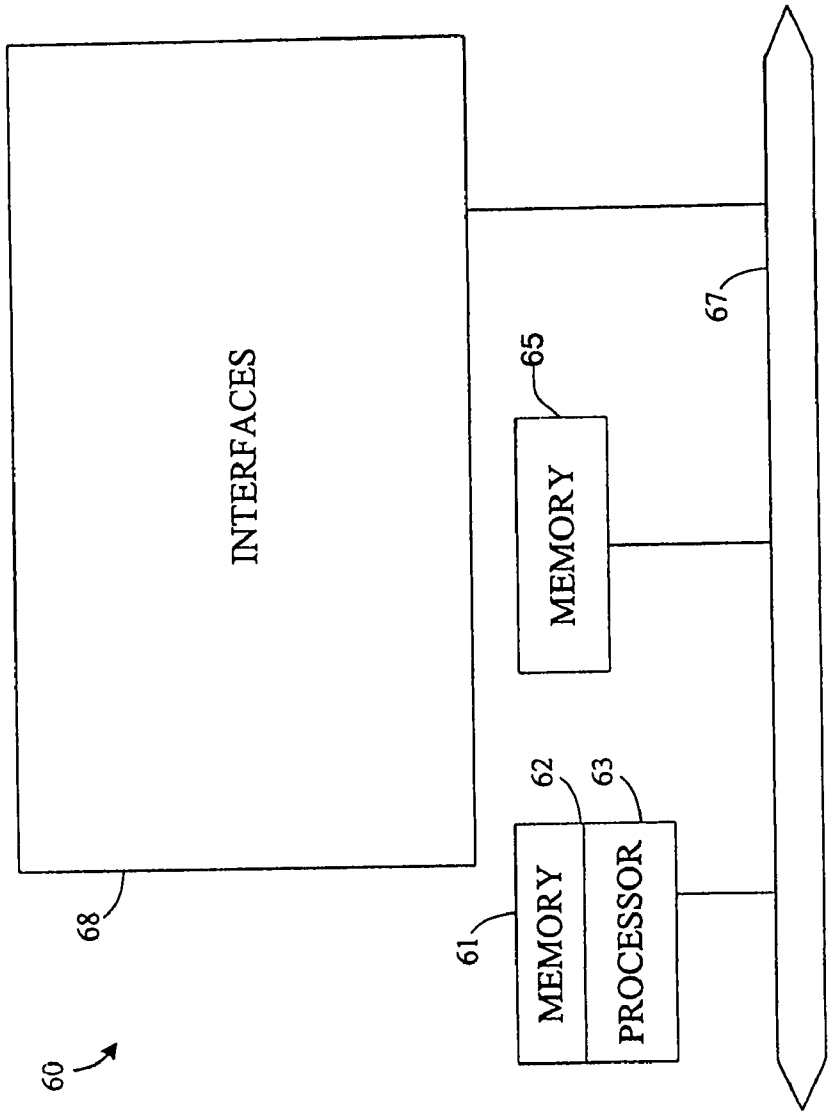

Figure 8

RESTRICTED PURCHASE OF REGULATED ITEMS OVER A NETWORK

CROSS-REFERENCE TO RELATED APPLICATIONS

This application is a continuation of U.S. patent application Ser. No. 09/813,235, filed Mar. 19, 2001, and entitled "TECHNIQUE FOR HANDLING SALES OF REGULATED ITEMS OVER A DATA NETWORK", which is hereby incorporated herein by reference.

This application is also related to the following patent applications: U.S. patent application Ser. No. 09/568,603, filed May 10, 2000, and entitled "INTEGRATED SYSTEM FOR ORDERING, FULFILLMENT, AND DELIVERY OF CONSUMER PRODUCTS USING A DATA NETWORK"; and U.S. patent application Ser. No. 09/750,385, filed Dec. 27, 2000, and entitled "TECHNIQUE FOR IMPLEMENTING ITEM SUBSTITUTION FOR UNAVAILABLE ITEMS RELATING TO A CUSTOMER ORDER". Each of the above-referenced U.S. patent applications is incorporated herein by reference in its entirety for all purposes.

BACKGROUND OF THE INVENTION

1. Field of the Invention

The present invention relates generally to electronic commerce, and more specifically to a technique for handling on-line sales and delivery of regulated items implemented using a data network.

2. Background

Over the past decade there has been a dramatic increase in on-line electronic commerce transactions conducted between consumers and retailers via the Internet or World Wide Web. Typically, during an electronic commerce transaction, the on-line merchant or retailer displays an electronic catalog of items which are available for purchase by a consumer or customer. The consumer then selects desired items to add to his or her electronic shopping cart and, when finished, requests to proceed to "checkout" in order to purchase the selected items and complete the electronic commerce transaction. Once the "checkout" transaction has been completed, the on-line merchant then fulfills the customer order, and either ships or delivers the customer order to a delivery location specified by the customer.

It is noted that most electronic commerce transactions that occur over the Internet are subject to the regulatory laws of the state or region where each on-line sales transaction has occurred. Typically, the laws and regulations governing on-line sales transactions are determined based upon the customer's billing address or the location where the delivery is to take place.

It is the responsibility of the on-line merchant to be aware of and conform with the requirements of each state's regulations relating to electronic commerce transactions in that state. Unfortunately, many on-line merchants are not able to conform with each state's regulations governing on-line sales transactions when engaging in electronic commerce transactions with customers in a particular state. One reason for this is that many systems which are designed to implement electronic commerce transactions are not configured to take into account each of the regulations governing electronic commerce transactions when taking orders from customers residing in different states or regions.

Accordingly, there exists a continual need to improve upon electronic commerce techniques in order to comply with laws and regulations which affect electronic commerce and on-line sales transactions.

SUMMARY OF THE INVENTION

According to specific embodiments of the present invention, a method and computer program product are disclosed for implementing electronic commerce transactions via a data network. A regulated item selected by a customer is identified. The regulated item may correspond to an item which satisfies predetermined criteria, indicating that the regulated item is prohibited from being purchased by the customer. Action can then taken to prohibit the purchase of the selected item, via the data network, by the customer. According to one embodiment, the action taken to prohibit the purchase of the regulated item is automatically implemented at a server system configured to implement electronic commerce transactions between an on-line merchant and the customer. According to a specific implementation, the predetermined criteria correspond to regulations which restrict sales of the regulated items to persons in a particular jurisdiction based upon certain criteria such as, for example, time of day, day of week, age of the customer, type of product being sold, etc.

According to specific embodiments, a variety of techniques may be used to prevent the purchase of the regulated item by the customer. In one embodiment, the display of items available for purchase by the customer may be modified to restrict the display of items which are not allowed to be purchased by the customer based upon specific criteria. In another embodiment, the customer may be prevented from adding the regulated item to the customer's electronic shopping cart. Alternatively, the customer may be prevented from purchasing or checking out the regulated item during an on-line checkout procedure.

According to one particular embodiment, the present invention relates to a computer-implemented method for implementing electronic commerce transactions via a network. The method includes at least the acts of: identifying a regulated item selected by a customer, the regulated item corresponding to an item which satisfies one or more predetermined criteria, the one or more predetermined criteria indicating at least that the item is subject to one or more regulations, and the regulated item being made available from a merchant via an on-line store; placing the regulated item in an electronic shopping cart associating with an order of the customer from the on-line store, the order also having delivery information from the customer regarding delivery of the order; and subsequently taking action to remove the regulated item from the electronic shopping cart associated with the customer, the removal of the regulated item from the electronic shopping cart being based on the one or more predetermined criteria and the delivery information.

According to another particular embodiment, the present invention relates to a computer-implemented method for facilitating online purchase of regulated products over a network. The method includes at least the acts of: providing an online store for products, at least a portion of the products being regulated products; enabling a customer to interact with the online store to create an online order for a plurality of the products; requesting the customer to set a delivery time for the online order; receiving a requested delivery time for the online order from the customer; determining whether the online order includes at least one regulated product; determining, when it has been determined that the online order includes at least one regulated product, whether the requested

delivery time is permitted based on at least one regulation associated with the at least one regulated product; and producing a perceptible indication that the at least one regulated product is not permitted to be delivered at the requested delivery time when it is determined that the at least one regulated product is not permitted to be delivered at the requested delivery time.

According to still another particular embodiment, the present invention relates to a computer-implemented method for implementing electronic commerce transactions via a network. The method includes at least the acts of: identifying a regulated item selected by a customer, the regulated item corresponding to an item which satisfies one or more predetermined criteria, the one or more predetermined criteria indicating that the item is prohibited from being purchased by the customer, the one or more predetermined criteria corresponding to at least one regulation which restricts sales of the regulated item to persons in a particular location; and taking action, other than or in addition to presenting a notification message, to prevent the purchase of the regulated item via the network by the customer in accordance with the at least one regulation.

Additional objects, features and advantages of the various aspects of the present invention will become apparent from the following description of its preferred embodiments, which description should be taken in conjunction with the accompanying drawings.

BRIEF DESCRIPTION OF THE DRAWINGS

FIG. **1** shows a schematic block diagram showing the most relevant parts of integrated system architecture **100** in accordance with a specific embodiment of the present invention.

FIG. **2** shows a flow diagram of a Customer Order Handling Process **200** in accordance with a specific embodiment of the present invention.

FIG. **3**A shows a flow diagram of a Regulated SKU Processing Procedure A in accordance with a specific embodiment of the present invention.

FIG. **3**B is a flow diagram of an Item Restriction Analysis Procedure in accordance with a specific embodiment of the present invention.

FIG. **4** shows an example of a Regulation Table in accordance with a specific embodiment of the present invention.

FIGS. **5** and **6** show alternate embodiments of the Regulated SKU Processing Procedure.

FIGS. **7**A-**7**C illustrate various types of rules, conditions, regulations, and/or other information which may be used for implementing the regulated item processing technique in accordance with a specific embodiment of the present invention.

FIG. **8** shows a specific embodiment of a network device suitable for implementing the regulated item processing techniques of the present invention.

DETAILED DESCRIPTION OF THE PREFERRED EMBODIMENTS

According to specific embodiments of the present invention, a technique is described for handling on-line sales of regulated items or products during electronic commerce transactions. It will be appreciated that the handling of on-line sales of regulated items of merchandise provides a difficult challenge since there are literally thousands of federal, state, county, city, and township regulations which may need to be complied with across thousands of geographic jurisdictions. Additionally, many of these laws and regulations were not originally drafted to take into account electronic commerce transactions. As a result, an additional level of difficulty in applying such regulations to electronic commerce exists in that legal interpretations of such laws need to be preformed so as to correctly apply the appropriate laws and regulations to electronic commerce transactions.

Generally, the regulatory laws governing retail commerce transactions mandate specific restrictions concerning the pricing, display, sale, and/or delivery of regulated products. Many of these laws, however, are similar in nature, and therefor may be distilled down to a limited number of common conditions which require compliance activity. According to a specific embodiment of the present invention, the conditions and compliance activities are preferably treated in a systematic manner in order to allow the generation of a base set of rules which may then be re-applied, perhaps with different parameters, to different jurisdictions. According one implementation, the base set of rules may be represented as business rules which may be embodied by a set of lists or tables that enable an electronic commerce system to quickly, easily, and reliably identify regulated items of merchandise, and to easily respond to changing laws and/or regulations.

FIGS. **7**A-**7**C illustrate various types of rules, conditions, regulations, and/or other information which may be used for implementing the regulated item processing technique in accordance with a specific embodiment of the present invention. As described in this application, the term "regulated SKU" or "regulated item" may be defined as a SKU (i.e., item of merchandise) which has associated with it special needs for the display, sale, delivery, pricing and/or vendor selection as mandated by law or other requirements.

According to a specific embodiment of the present invention, selected SKUs in the on-line catalog may be assigned a corresponding regulation code attribute which enables that SKU to be identified as belonging to a particular class of regulated products. In a specific implementation, the assignment of a regulation code attribute may be applied only to regulated SKUs of the on-line catalog. An example of a regulation code assignment scheme is shown in FIG. **7**C of the drawings.

FIG. **7**C shows a Regulation Code Attribute Table **770** in accordance with a specific embodiment of the present invention. The Regulation Code Attribute Table **770** may be used to help identify regulated SKUs which belong to a particular class or sub-class of regulated products. According to one implementation, the regulation code attributes may be structured so as to allow identification of different levels of granularity within a particular regulated product category. For example, as shown in FIG. **7**C, the regulation code table **770** includes a regulation code entry **772** and an associated description **774** of the class or sub-class of the regulated products associated with that particular regulation code. Thus, for example, as shown in FIG. **7**C, the regulation code "A" may be used to identify all SKUs which are related to alcohol type products. The regulation code "AB" may be used to identify all SKUs which are associated with beer products. In this example, the regulation code "AB" for beer products represents a sub-class of regulated alcohol products. The regulation code "AB3" may be used to identify SKUs which are associated with beer having a 3.2% alcohol content, which is a sub-class of the regulated beer products. Thus, for example, if a particular SKU has an associated regulation code attribute of AB3, this SKU may be interpreted as being an alcohol product, a beer product, and/or a 3.2% beer product. It will be appreciated that any or all of these interpretations may be used for applying the appropriate regulatory rules for handling on-line sales of this item.

As shown in FIG. 7C, the Regulation Code Attribute Table **770** may be used to define a plurality of different classes and sub-classes of regulated products such as, for example, alcohol, beer, 3.2% beer, distilled spirits, wine, dairy, insignia, tobacco, cigarettes, cigars, pipe tobacco, non-regulated products, etc. It will be appreciated that the regulated classes and sub-classes of products described in the table of FIG. 7C does not represent a complete list of all regulated products. Moreover, the regulation code attribute table may be modified to include additional classes and sub-classes of other regulated products, which will generally be known to one having ordinary skill in the art.

In addition to the regulation code attributes, a list or table of conditions may also be provided for use in identifying legal requirements which may mandate that the electronic commerce system evoke one or more types of compliance actions when selling particular regulated products to customers over a data network such as, for example, the Internet.

FIG. 7A shows an example of a conditions list or Conditions Table **700** in accordance with a specific embodiment of the present invention. According to one implementation, the conditions table may enumerate different types of regulatory conditions which may evoke compliance actions within any of the on-line merchant's service areas.

As shown in FIG. 7A, the Conditions Table **700** includes a plurality of entries relating to specific condition identifiers or condition IDs. Each entry represents a specific condition or legal requirement which may require the on-line merchant to evoke one or more compliance actions. Each entry in the Conditions Table **700** may include, for example, a Condition ID field **702** and a description field **704**.

In the example of FIG. 7A, the Conditions Table **700** may be used to define a plurality of different regulatory conditions such as, for example, minimum age conditions, dry delivery address conditions, day of week shopping conditions, day of week delivery conditions, hours of operation conditions, period of day shopping conditions, period of day delivery conditions, same state delivery conditions, minimum price conditions, etc.

For example, the condition "MIN AGE" may be used to represent legal regulations or mandates which exist related to shoppers, customers, or delivery recipients whose age is less than a specified minimum. The Condition ID entry corresponding to "DAY OF WEEK SHOPPING" may be used to refer to regulations or mandates which exist relating to the sale and/or delivery of items which are restricted during certain days of the week. For example, certain states have mandated that alcohol is not to be sold to customers on Sunday or Election Day. It will be appreciated that the Conditions Table **700** represents a portion of the various conditions regulating electronic commerce transactions, and that the table may be modified to include additional conditions which will generally be known to one having ordinary skill in the art.

The Conditions Table **700** of FIG. 7A does not specify what actions are to be implemented in enforcing a particular condition. Thus, according to one implementation, the conditions list may be used as way to categorize and list each possible type of regulatory condition that may affect electronic commerce transactions conducted by the on-line merchant.

According to a specific embodiment, selected conditions in the conditions list may evoke one or more compliance actions or restrictions by the on-line merchant. Further, according to a specific implementation, at least one list or table may be generated which includes various types of compliance actions which may be automatically evoked by the online merchant's computer system in order to restrict the sale of specific regulated products.

FIG. 7B shows an example of a regulation list or table **750** in accordance with a specific embodiment of the present invention. As shown in FIG. 7B, the restrictions table **750** includes a plurality of entries which specify various types of compliance actions which may be automatically implemented by the on-line merchant's electronic commerce system to enforce or ensure compliance with specific regulatory conditions. According to one embodiment, the same restriction may be applied to more than one condition.

As shown in the example of FIG. 7B, each entry in the Restriction Table **750** includes a Restriction ID field **752** and a description field **754**. Each restriction entry corresponds to a specific compliance action which may be used by the on-line merchant to enforce one or more regulatory conditions. For example, the restriction "no cart" may be used to indicate that a condition will be enforced by not allowing a customer to add a SKU item to the customer's electronic shopping cart. The restriction "no checkout" may be used to indicate that a condition may be enforced by not allowing the customer to purchase the SKU item.

According to a specific implementation, after the various regulation codes, condition IDs and restriction IDs parameters have been defined, these parameters may then be collated into a regulation list or table in order to generate a set of rules that may used to manage all or selected variations of regulatory compliance affecting electronic commerce transactions conducted by the on-line merchant in various jurisdictions. An example of a regulation table is shown in FIG. **4** of the drawings.

FIG. **4** shows an example of a Regulation Table **400** in accordance with a specific embodiment of the present invention. As described in greater detail below, the regulation table may be used to map various SKU regulation codes, conditions, restrictions, and parameterized values in order to allow an on-line merchant to implement the appropriate regulatory compliance action(s) when selling or delivering a regulated SKU product to a customer in specific jurisdictions. Entries in the regulation table may be made that set defaults for all distribution centers. However, individual distribution centers may be able to override the default entries with different or more stringent controls for specific delivery zones or sub-zones. According to one embodiment, the regulation table may be consulted to determine whether additional processing may be necessary whenever a regulated SKU is encountered at appropriate points in the customer order processing cycle.

According to a specific implementation, different regulation tables may be generated for handling sales or delivery of regulated products in specific regions or zones. Alternatively, a master regulation list may be generated for handling sales or deliveries or regulated products throughout all jurisdictions in which the merchant is engaging in electronic commerce transactions. Using the master regulation table, a single set of rules may be used to manage all variations of regulatory compliance in all jurisdictions of activity. Moreover, for any regulated SKU which is identified in a particular jurisdiction, the system of the present invention may reference the master restriction table in order to identify the appropriate rules(s) which apply when engaging in electronic commerce transaction activities relating to the regulated SKU.

For example, as shown in FIG. **4** of the drawings, the Regulation Table **400** includes a plurality of regulation entries (e.g., **401**, **403**, etc.), wherein each regulation entry includes a specific set of parameters which defines specific compliance actions which are to be automatically implemented if certain conditions or other parameters have been satisfied with respect to a particular class or sub-class of regulated product. The different parameters of the regulation table may include,

for example, compliance actions based upon one or more of the following parameters: distribution center **402**, delivery zone **404** or sub-zone **406**, regulation code **408**, Condition ID **410**, Restriction ID **412**, age of the customer **414**, delivery address **416**, day of the week **418**, time of day **420**, month of year, week of month, day of month, calendar date, effective data **422**, expiration date **424**, etc. Thus, for example, entry **401** of Regulation Table **400** relates to a compliance action which may be applied at all distribution centers in which alcohol products (e.g. SKUs associated with regulation code A) may not be sold (i.e. "No Checkout") to customers who do not meet the minimum age requirement of being at least 21 years of age. Entry **403** of the Regulation Table **400** relates to a compliance action which may be applied to all distribution centers in which tobacco products (e.g. SKUs associated with regulation code T) may not be sold (i.e. "No Checkout") to customers who do not meet the minimum age requirement of being at least 18 years of age.

It will be appreciated that the technique of the present invention may also accommodate jurisdictions having more or less stringent requirements relating to at least a portion of regulated products. For example, the city of Atlanta, Georgia prohibits the sale of alcohol on Sundays and Election Day, and also prohibits the sale of distilled spirits (e.g., alcohol products containing more than 21% alcohol by volume) by general merchants or grocery stores. The city of Atlanta also allows alcohol to be sold to persons who are at least 18 years of age. In order to comply with these legal requirements, specific entries may be included in the Regulation Table **400** of FIG. **4**.

For example, entry **405** relates to a compliance action which may be implemented only at Atlanta distribution centers (ATL01), wherein alcohol products may not be sold to customers who are not at least 18 years of age. Entries **407** and **409** of the Regulation Table **400** relate to compliance actions wherein distilled spirits (e.g. SKUs associated with the regulation code AD) products are not displayed as being for sale to on-line customers whose residence address or delivery address is located in Atlanta.

Additionally, one or more entries in the Regulation Table **400** may include an effective date field **422** to allow a particular regulation entry to be entered into the table before the new regulation actually goes into effect. Further, selected regulation entries may include an expiration date field **424** which may be used for specifying a particular date and/or time when the corresponding legal regulation will no longer be in effect.

In the example of FIG. **4**, two or more conditions and/or restrictions on separate line entries for the same regulation code may be interpreted as having an OR relationship. Two or more conditions and/or restrictions on the same line entry for a given SKU regulation code may be interpreted as having an AND relationship. For example, entry **401** of Regulation Table **400** relates to a compliance action which may be applied at all distribution centers in which alcohol products may not be sold to customers who do not meet the minimum age requirement of being at least 21 years of age, and where the regulation becomes effective on Mar. 15, 2000.

It will be appreciated that the Regulation Table **400** of FIG. **4** illustrates a specific embodiment for handling on-line sales of regulated products. However, it will be appreciated that the technique described herein for handling on-line sales of regulated products in different jurisdictions may be implemented using a variety of different implementation techniques. For example, according to a different embodiment, a specific set of rules and/or parameters may be used to define compliance actions in specific jurisdictions. For example, in order to prevent Sunday delivery of alcohol products for all delivery zones in the Atlanta region, the following set of rules and/or parameters may be applied:

Atlanta delivery zones=ALL
Month of Year=ALL
Week of Month=ALL
Day of Week=Sunday
Period of Day=ALL

In order to prevent sale or delivery of alcohol to Atlanta residence on Election Day (i.e., the first Tuesday in November), the following rules and/or parameters may be defined:

Atlanta delivery zones=ALL
Month of Year=November
Week of Month=1
Day of Week=Tuesday
Period of Day=ALL

FIG. **1** shows a schematic block diagram of a specific embodiment of an integrated system architecture **100** which may be used for implementing the regulated item processing technique of the present invention. As shown in FIG. **1**, system **100** includes a plurality of subsystems and other components for effecting electronic commerce over a data network. A brief description of at least a portion of the plurality of subsystems of system **100** is presented below.

For example, system **100** of FIG. **1** may include a Publishing (PUB) Subsystem **140** which provides an interface to merchants, vendors and/or content managers **133**; a Webstore Subsystem (WS) **132** which manages the on-line store interface with customers, including customer shopping and ordering transactions; an Order Management Subsystem (OMS) **150** which manages pricing data, item availability data, inventory data, vendor data, finance, procurement, etc.; an Order Fulfillment Subsystem (OFS) **160** which facilitates the fulfillment of customer orders; etc. Each of the various subsystems shown in FIG. **1** of the drawings will now be described briefly below.

According to a specific implementation, the PUB Subsystem **140** may be used for managing SKU inventory and catalog information (e.g. SKUs, UPCs, products, categories, descriptive attributes, etc.). Additionally, according to a specific implementation, the PUB subsystem may be used for allowing merchants or vendors to enter regulatory information such as, for example, regulation code parameters for selected SKUs, condition information, restriction information, etc.

"Inventory" is the stock of SKU items actually available for customer orders. Each different item of inventory is associated with a respective stock keeping unit or SKU, regardless of whether the item is available for customer purchase. A "stock keeping unit" or SKU may be defined as a unique identifier that corresponds to a particular consumer item. A type of product, for example, Brand A ketchup, may have several unique SKUs, each corresponding, for example, to different sizes and/or flavors of Brand A ketchup.

Merchants and content managers **133** may enter and maintain SKU information stored in the PUB database using the PUB Web GUI interface **134** and PUB Bulk Loader interface **136**. The SKU information may include SKU attribute values such as, for example, UPCs, vendors, categories, category hierarchy, images, articles, descriptive information, regulation codes, etc. The PUB Web GUI interface **134** allows merchants to edit SKU information, products, and/or categories. The PUB Bulk Loader **136** supports the processing of data files from outside the PUB Subsystem into the PUB database **141**. According to a specific embodiment, the PUB Bulk Loader is configured to allow merchants to upload a variety of data file types into the PUB database including flat

data files, and image files. The Bulk Loader processes the flat file information to create appropriate database records for the PUB catalog.

Periodically (e.g., minutes, hours, days) the OMS polls the PUB database for new and updated SKU information, and stores the retrieved data into the OMS database **151**. According to a specific embodiment, OMS maintains available-to-promise (ATP), price, and inventory (e.g., replenishment and purchasing) information for each SKU. OMS may also capture and/or manage sales and shipment data relating to each SKU. Periodically, OMS passes new and updated SKU information it acquires from the PUB Subsystem to the OFS. The SKU information may be used by OFS, for example, to maintain physical inventory and fulfill orders.

According to a specific embodiment, the PUB Subsystem **140** may be used as an interface to allow merchants/vendors to enter regulated merchandise processing instructions relating to specific SKUs. An examples of regulated merchandise processing instructions for selected regulated products is shown in FIGS. **4** and **7**A-C of the drawings.

It will be appreciated that, in an alternate embodiment, the regulated merchandise processing instructions may be entered by merchants, vendors, or other human operators via the Webstore interface **132**, or via other desired system interfaces. Further, according to a specific implementation, the merchant or vendor is able to add, rearrange, and remove items from the list of regulated items.

According to at least one alternate embodiment, regulated merchandise processing instructions may be generated manually or automatically using a general set of business rules and information relating to laws and regulations governing on-line sales transactions in selected states and/or regions. A preliminary list of regulated items may also be generated in the same manner to be approved or edited by merchants. In any of these embodiments, the regulated merchandise processing instructions are typically stored in a database for retrieval at an appropriate point of use.

Webstore Subsystem (WS)

According to a specific implementation, the Webstore Subsystem (WS) **132** provides an interface for enabling customers to access an on-line store (e.g. Webstore), which, for example, may be used to provide a customer with an electronic representation of a retail store. In a specific embodiment where the Webstore may be implemented as a website on the World Wide Web, customers **102** may access the Webstore via the Internet **104** or World Wide Web using any one of a plurality of conventional browsers. The Webstore user interface may be designed to provide a rich set of functions without requiring any special browser plug-ins. Thus, according to a specific embodiment, customers may access the Webstore using any client machine, regardless of the machine's operating system platform. Additionally, for security purposes, the Webstore interface also supports data encryption for exchange of any sensitive or private information between the customers and the website. According to a specific embodiment, the secure Webstore interface may be implemented using a secure http protocol (HTTPS), commonly known to those of ordinary skill in the art.

In accordance with a specific embodiment, the Webstore Subsystem **132** may be configured to support a number of customer related features such as, for example, self registration; accessing of customer account information; browsing of product categories and category hierarchy; viewing of product images and product information; keyword searches; delivery scheduling; accessing of customer order history; customizable shopping lists; on-line shopping and ordering; etc.

The Webstore Subsystem (herein referred to as the Webstore) may be implemented using at least one server which is connected to the data network. According to a specific embodiment, the Webstore may be implemented using a plurality of web servers (e.g. a load-balanced web server farm) which helps to minimize server response time and provide real-time failover and redundancy capabilities. Further, according to a specific embodiment, in order to keep the web server response time to a minimum, the Webstore may be configured such that all processing is performed on a single server, within one process. Where a plurality of Webstore servers are used, redundant processing may be performed by at least a portion of the servers so that a single Webstore server may handle all Webstore processing tasks associated with a particular on-line customer. It will be appreciated that the Webstore server boundaries may be crossed where appropriate, such as, for example, when accessing desired databases via the data network.

Order Management Subsystem (OMS)

The Order Management Subsystem (OMS) **150** manages a variety of aspects related to the integrated system architecture of system **100**, including, for example, pricing, availability, inventory, vendors, financials, procurement, and data flows between various subsystems.

As shown in FIG. **1**, the OMS subsystem **150** includes at least one database **151** for storing various data received from at least a portion of the other subsystems. According to a specific embodiment, the database **151** is configured to include a plurality of schemas, such as, for example, standard packaged application schemas and/or customized schemas. According to a specific implementation, the OMS database is configured as a single Oracle database running on a Sun Solaris server.

According to a specific implementation, OMS batch processing may be controlled using a process scheduler. The process scheduler is able to manage the number of concurrent processes being run and the date/time at which certain processes are to run or be executed. The process scheduler may also enable central visibility of all processes currently running. Batch processing and reporting may be accomplished using a variety of different technologies commonly known to one having ordinary skill in the art.

The Order Management Subsystem may be configured to support both asynchronous and synchronous interfaces with the other subsystems. In a specific embodiment, the OMS is configured to support an asynchronous interface with each of the other subsystems. Additionally, each OMS interface is configurable, and may be configured to support the running of batch processes as often as is desirable.

Implementation of the various interfaces between OMS and the other subsystems may be accomplished using a variety of different techniques commonly known to one having ordinary skill in the art. The following description provides an example of at least some of the various techniques which may be used for interfacing OMS with the other subsystems. However, it will be appreciated that the specific interfaces described below may be implemented using other techniques commonly known to those of ordinary skill in the art.

The interface between the OMS and the Webstore Subsystem may be implemented, for example, using a plurality of executable programs. A first portion of the executable programs may be responsible for moving data from the Webstore to the OMS. This data may include, for example, new/updated customer data, new/updated order data, order cutoff information, order billing information, customer return information, customer credits and fees (e.g. bill adjustment data), etc. A second portion of the executable programs is responsible for

moving data from the OMS to the Webstore Subsystem. This data may include, for example, inventory data, availability data, pricing data, and information about shipped customer orders.

Order Fulfillment Subsystem (OFS)

The Order Fulfillment Subsystem **160** manages all functionality of the distribution center (DC). In the embodiment of FIG. **1**, the OFS includes appropriate hardware and/or software for managing the DC, including, for example, a warehouse management system (e.g. application software), at least one database **161**, an optional automated material handling (AMH) controller component **163**, if desired (which manages conveyor, carousel, and scanner components), etc.

In a specific implementation, the Order Fulfillment Subsystem **160** may be implemented using a warehouse management system such as, for example, the MOVE warehouse management system provided by Optum, Inc. of Costa Mesa, Calif. The warehouse system also provides an interface with the Order Management Subsystem. In a specific embodiment, this interface may be implemented using a business host interface (BHI). The warehouse management subsystem may also provide the interface for allowing the OMS subsystem to communicate with the OFS database **161**.

The description is only a partial description of an architecture that is suitable for practicing the current invention, with emphasis on the subsystems that are most directly involved in the Regulated SKU Processing Procedure of the present invention. For a more complete description of such an architecture, see U.S. patent application Ser. No. 09/568,603.

It will be appreciated that other embodiments of the system of FIG. **1** may be used for implementing the technique of the present invention. For example, entire subsystems or selected features or components of the WS Subsystem **132**, OMS Subsystem **150**, PUB Subsystem **140**, and/or OFS Subsystem **160** may be eliminated (if desired) or incorporated into other subsystems of the system of FIG. **1**. Such modifications will be apparent to one having ordinary skill in the art. In a specific embodiment, it is preferable that the system **100** include at least a Webstore Subsystem (for receiving customer orders and maintaining inventory records), and an Order Fulfillment Subsystem (for fulfilling customer orders).

FIG. **2** shows a flow diagram of a Customer Order Handling Process **200** in accordance with a specific embodiment of the present invention. The Customer Order Handling Process of FIG. **2** depicts a simplified overview of the various processes by which customer orders are taken, the customer orders are processed, and the customer orders are fulfilled and delivered in accordance with a specific embodiment of the present invention.

At **202**, a customer enters his or her customer order via the Webstore **132** interface (described above). According to a specific embodiment, a "customer order" includes a list of SKU items that have been ordered, their associated quantities, and other relevant information (e.g., payment information, delivery time information, etc.)

The customer order may include one or more "line item orders," where each line item order corresponds to a particular SKU and includes a desired quantity of the ordered SKU.

According to a specific embodiment, during the customer ordering process, customers will be provided information relating to availability of items. For example, customers may be provided with information relating to particular items which will not be available for delivery at the delivery window selected by the customer.

Returning to FIG. **2**, at a designated time after a customer order has been placed, a "cutoff" time occurs (**204**), at which point the customer is no longer able to modify the order. The customer order is then sent along with other "cutoff" customer orders to be processed (**206**). The processing of a customer order is generally described in U.S. patent application Ser. No. 09/568,603, previously incorporated herein by reference. In one implementation, order processing may be implemented at the Webstore Subsystem **132**. In alternate embodiments, the order processing may be implemented at any desired subsystem which has been configured to handle the various tasks associated with the processing of customer orders. After the customer order has been processed, the customer order is then fulfilled (**208**) by obtaining the appropriate items from a warehouse, distribution center, or other locations. Once the order has been fulfilled, it may then be delivered (**210**) to the customer.

According to different embodiments of the present invention, there are a variety of techniques which may be used to help prevent the sale of restricted products to on-line customers which would violate legal regulations in various jurisdictions. For example, one technique for preventing illegal sales of restricted products is to prevent the restricted products from being displayed to the customers during the on-line customer shopping session. Another technique is to not allow the regulated item to be added to the customer's electronic shopping cart. A further example is to not permit the regulated item to be checked out of the customer's electronic shopping cart. Yet another example is to prevent delivery of the regulated item to the customer. Several of these examples are described in greater detail below with respect to FIGS. **3**A, **3**B, **5**, and **6** of the drawings.

FIG. **3**A shows a flow diagram of a Regulated SKU Processing Procedure A (**300**) in accordance with a specific embodiment of the present invention. According to one implementation, the Regulated SKU Processing Procedure **300** may be implemented during an on-line customer shopping session. Additionally, according to a specific implementation, the Regulated SKU Processing Procedure **300** may be implemented at the web store **130** of FIG. **1**.

Initially, as shown at **302** of FIG. **3**A, a customer may access the on-line merchant's electronic commerce system in order to initiate a shopping session. According to a specific implementation, as shown in FIG. **1**, for example, the customer may access the Webstore **130** for initiating an on-line shopping session.

Once the customer has initiated a shopping session with the on-line merchant's electronic commerce system, the customer may begin to shop by browsing the on-line merchant's catalog and adding items to the customer's electronic shopping cart. According to a specific implementation, the customer may schedule (**304**) a specific delivery window (e.g. specifying a particular date and time) for receiving delivery of the customer order. For example, the on-line merchant Webvan.com requires that customers select a delivery window for each customer order that is placed with the on-line system. Once the customer order has been fulfilled, it will subsequently be delivered to the customer at the time and date specified by the selected delivery window. At the time of delivery, the customer may be asked to provide a signature for proof of receipt of the customer order. According to some jurisdictions, the sale of a product is considered to occur at the time that the product is actually delivered to the customer. Accordingly, it will be appreciated that, according to specific embodiments, the delivery window may determine whether the sale of a particular restricted product is permitted.

According to a specific embodiment, each customer delivery address may be geocoded or mapped to a respective area, zone, and/or subzone, which, according to a specific implementation, are not based upon the zip code of the delivery

address. This mapping technique is advantageous since municipal regulations frequently define regulated regions of commerce by area, zone, or subzone (e.g. "dry zones" where the sale of alcohol is prohibited). Moreover, such regulated regions may bisect one or more zip code regions. Accordingly, using the customer delivery address geocoding technique of the present invention, delivery zones or subzones may be defined which map directly to a municipally regulated zone or subzones. Thus, for example, if a municipally regulated "dry zone" is mandated which bisects one or more zip code regions, a delivery zone may be defined to correspond to the mandated dry zone boundaries, regardless of zip code boundaries. Regulated product(s) may then be prevented from being sold or delivered to customers whose delivery address is within this "dry" delivery zone.

According to a specific embodiment, after the customer selects or schedules a delivery window for delivery of the customer order, the customer's electronic shopping cart may be examined to determine (**306**) whether the customer's electronic shopping cart includes any items. According to a specific embodiment, if it is determined that the customer cart is not empty, an Item Restriction Analysis Procedure may be executed (**308**) in order to remove any regulated items selected by the customer which are not available to be delivered at the specified delivery window. An example of an Item Restriction Analysis Procedure is shown in FIG. **3**B of the drawings.

During the Item Restriction Analysis Procedure, a first item from the customer's scheduled shopping cart is selected (**352**). The selected item is then analyzed (**354**) in order to determine whether the selected item corresponds to a regulated item which is not allowed to be delivered at the designated delivery window. In performing this determination, a regulation code associated with the selected item or SKU may be identified. A regulation table (e.g. Regulation Table **400**) may then be consulted to determine whether the sale or delivery of the identified, regulated SKU is permissible. If it is determined that the selected item is not allowed to be sold or delivered to the customer at the designated delivery window, a selected item may be removed (**356**) from the customer's scheduled shopping cart and placed into an unscheduled shopping cart. If, however, it is determined that the selected item is allowed to be sold and delivered to the customer at the designated delivery window, no further action is taken regarding the selected item. Once the Item Restriction Analysis Procedure has been performed for the selected item, a determination may then be made (**358**) as to whether there are additional items in the customer's scheduled shopping cart. If so, a next item from the scheduled shopping cart is selected for analysis. This process may continue until each of the items in the customer's scheduled shopping cart have been analyzed by the Item Restriction Analysis Procedure.

Returning to FIG. **3**A, once the Item Restriction Analysis Procedure has performed an analysis on the items in the customer's scheduled shopping cart, a determination may then be made (**310**) as to whether the customer's scheduled shopping cart is empty. If so, the customer may be advised (**312**) that no items are available to be delivered at the selected delivery window. According to a specific implementation, the customer may then be provided with the opportunity to select an alternate delivery window.

According to an alternate embodiment, the customer may not be required to select a delivery window. For example, many on-line merchants such as, for example, Amazon.com, do not require the customer to select a delivery window for receipt of the customer order. Rather, the on-line merchant allows the customer to purchase products via the Internet. The purchased items are then packaged and shipped to the customer via common carrier. Typically, the customer is charged for the purchase of the goods at the time that the order is shipped to the customer.

One technique for handling on-line sales of regulated products is to dynamically modify the display of products which are available to be sold/delivered to each customer. This is shown, for example, at events **314** and **316** of FIG. **3**A.

During the customer's on-line shopping session, the customer may request (**314**) display of selected items available for purchase by the on-line merchant. According to a specific implementation, the display of items available for purchase by the customer may be modified (**316**) based upon predetermined rules such as, for example, the regulation criteria defined in one or more regulation lists. The modification of the product display may be based upon a number of different factors such as, for example, the customer's delivery address, the customer's age, the customer's residence address, the date/time of delivery (if any), etc. According to one embodiment, the products which are not allowed to be sold or delivered to a specific customer may be hidden or otherwise prevented from being displayed to that customer. Alternatively, the regulated items may be displayed to the customer, but the customer will not be allowed to add the regulated item to the customer's electronic shopping cart.

Another technique for handling on-line sales of regulated items is to screen for regulated items as the customer selects each item to add to his or her electronic shopping cart. This is generally shown by events, for example, **318-326** of FIG. **3**A.

Initially, the customer may select a particular item, and submit a request to add (**318**) the selected item to the customer's shopping cart. An analysis may then be conducted (**320**) in order to determine whether the selected item is allowed to be sold and delivered to the customer (at a specified delivery window, if any). In performing this determination, a regulation code associated with the selected item or SKU may be identified. A regulation table (e.g. Regulation Table **400**) may then be consulted to determine whether the sale or delivery of the identified, regulated SKU is permissible.

If it is determined that the selected item is not allowed to be sold and delivered to the customer, the customer may be advised (**322**) that the selected item is not available to be added to the customer's electronic shopping cart. Additionally, according to a specific implementation, the regulated item may be placed (**324**) into an unscheduled shopping cart for the customer. If, on the other hand, it is determined that the selected item is allowed to be sold and delivered to the customer, the selected item may then be added to the customer's electronic shopping cart. Thereafter, the customer may continue with his or her on-line shopping session or may request to proceed to checkout.

According to a specific embodiment, another approach for handling on-line sales of regulated products is to screen the customer's electronic shopping cart for regulated items during checkout. This technique is generally described, for example, by events **326-332** of FIG. **3**A.

Referring to FIG. **3**A, at some point during the on-line shopping session, the customer may request to proceed to checkout in order to purchase the goods in the customer's electronic shopping cart. If, according to one embodiment, precautions have already been implemented for preventing inappropriate regulated items from being placed into the customer's scheduled shopping cart, then the checkout operation may proceed normally, whereby items in the customer's scheduled shopping cart may be check out (**328**) for purchase by the customer. If, according to a specific embodiment, selected regulated items have previously been placed into an

unscheduled shopping cart for the customer, a determination may then be made (**330**) as to whether any items exist in the customer's unscheduled shopping cart. If so, the customer may be advised (**332**) of the existence of the unscheduled shopping cart. Thereafter, the customer may then choose to continue shopping using the customer's unscheduled shopping cart.

Alternate embodiments of the Regulated SKU Processing Procedure are shown in FIGS. **5** and **6** of the drawings. In each of these embodiments, on-line sales of regulated SKU items may be handled during the customer checkout operation, where upon the content of the customer's shopping cart may be screened for regulated items which are not allowed to be sold/delivered to the customer.

As shown in the embodiment of FIG. **5**, once the customer has requested (**502**) checkout, an Item Restriction Analysis Procedure may be executed (**504**) for analyzing the contents of the customer's shopping cart. An example of an Item Restriction Analysis Procedure is shown in FIG. **3**B, described previously. In the example of FIG. **3**B, the Item Restriction Analysis Procedure will remove regulated items from the customer's current shopping cart which are not allowed to be sold or delivered to the customer, and may place the removed items into a new shopping cart. At **506** a determination is made as to whether there are any remaining items to be checked out of the customer's current shopping cart after having executed the Item Restriction Analysis Procedure. If so, flow may then commence starting at point B of FIG. **3**A. If, however, it is determined that there are no current items to be checked out from the customer's shopping cart, the customer may be advised (**508**) that there are no items available to be delivered or sold to the customer. The customer may also be advised as to the reason why the regulated items are unavailable. Thereafter, flow may then continue at point A of FIG. **3**A.

As shown in the embodiment of FIG. **6**, once the customer has requested (**552**) checkout, a determination is then made (**554**) as to whether there are any regulated items identified in the customer's shopping cart which are not allowed to be sold or delivered to the customer, based upon predetermined criteria such as that shown, for example, in FIG. **4**. If so, the customer may be requested (**556**) to remove the identified regulated items from the customer's electronic shopping cart. After all of the identified regulated items have been removed from the customer's electronic shopping cart, flow may then continue at point B of FIG. **3**A.

Another technique for preventing illegal sales of restricted products is to prevent delivery of the regulated item to the customer. According to a specific embodiment, delivery couriers (**110**, FIG. **1**) may be notified that a particular shipment contains one or more regulated items. A delivery courier may then be required to verify specific information (e.g. proof of age of the customer) before delivering the regulated item(s) to the customer. According to a specific implementation, the delivery restrictions may be provided to the delivery courier via the use of a mobile field device (MFD) **106**. A mobile field device (MFD) may be configured to download and/or upload various types of information, including, for example, customer order history information, delivery information (e.g. vehicle delivery routes, stops, etc.), customer returns information, credits, adjustments, regulated delivery information, etc.

Other Embodiments

Generally, the regulated item processing techniques of the present invention may be implemented on software and/or hardware. For example, they can be implemented in a separate user process, in a library package bound into network applications, on a specially constructed machine, etc. In a specific embodiment of this invention, the technique of the present invention is implemented in software such as an application running on an operating system.

A software or software/hardware hybrid implementation of the regulated item processing technique of this invention may be implemented on a general-purpose programmable machine selectively activated or reconfigured by a computer program stored in memory. Such programmable machine may be a network device designed to handle network traffic, such as, for example, a router or a switch. Such network devices may have multiple network interfaces including frame relay and ISDN interfaces, for example. Specific examples of such network devices include routers and switches. A general architecture for some of these machines will appear from the description given below. In an alternative embodiment, the regulated item processing technique of this invention may be implemented on a general-purpose network host machine such as a personal computer or workstation. Further, the invention may be at least partially implemented on a card (e.g., an interface card) for a network device or a general-purpose computing device.

Referring now to FIG. **8**, a network device **60** suitable for implementing the regulated item processing techniques of the present invention includes a master central processing unit (CPU) **62**, interfaces **68**, and a bus **67** (e.g., a PCI bus). When acting under the control of appropriate software or firmware, the CPU **62** may be responsible for implementing specific functions associated with the functions of a desired network device. For example, when configured to perform the functions of a server system adapted to implement electronic commerce transactions, the CPU **62** may be responsible for analyzing packets, encapsulating packets, forwarding packets to appropriate network devices, identifying regulated items or SKUs, identifying legal requirements or conditions which require compliance action to be taken with regard to the sale of regulated products, determining appropriate compliance actions to be implemented for identified regulated items, etc. The CPU **62** preferably accomplishes all these functions under the control of software including an operating system (e.g. Windows NT), and any appropriate applications software.

CPU **62** may include one or more processors **63** such as a processor from the Motorola family of microprocessors or the MIPS family of microprocessors. In an alternative embodiment, processor **63** is specially designed hardware for controlling the operations of network device **60**. In a specific embodiment, a memory **61** (such as non-volatile RAM and/or ROM) also forms part of CPU **62**. However, there are many different ways in which memory could be coupled to the system. Memory block **61** may be used for a variety of purposes such as, for example, caching and/or storing data, programming instructions, etc.

The interfaces **68** are typically provided as interface cards (sometimes referred to as "line cards"). Generally, they control the sending and receiving of data packets over the network and sometimes support other peripherals used with the network device **60**. Among the interfaces that may be provided are Ethernet interfaces, frame relay interfaces, cable interfaces, DSL interfaces, token ring interfaces, and the like. In addition, various very high-speed interfaces may be provided such as fast Ethernet interfaces, Gigabit Ethernet interfaces, ATM interfaces, HSSI interfaces, POS interfaces, FDDI interfaces and the like. Generally, these interfaces may include ports appropriate for communication with the appro-

priate media. In some cases, they may also include an independent processor and, in some instances, volatile RAM. The independent processors may control such communications intensive tasks as packet switching, media control and management. By providing separate processors for the communications intensive tasks, these interfaces allow the master microprocessor **62** to efficiently perform routing computations, network diagnostics, security functions, etc.

Although the system shown in FIG. **8** illustrates one specific network device of the present invention, it is by no means the only network device architecture on which the present invention can be implemented. For example, an architecture having a single processor that handles communications as well as routing computations, etc. is often used. Further, other types of interfaces and media could also be used with the network device.

Regardless of network device's configuration, it may employ one or more memories or memory modules (such as, for example, memory block **65**) configured to store data, program instructions for the general-purpose network operations and/or other information relating to the functionality of the regulated item processing techniques described herein. The program instructions may control the operation of an operating system and/or one or more applications, for example. The memory or memories may also be configured to include data structures which store regulation code information, Condition ID information, Restriction ID information, regulation information, etc.

Because such information and program instructions may be employed to implement the systems/methods described herein, the present invention relates to machine readable media that include program instructions, state information, etc. for performing various operations described herein. Examples of machine-readable media include, but are not limited to, magnetic media such as hard disks, floppy disks, and magnetic tape; optical media such as CD-ROM disks; magneto-optical media such as floptical disks; and hardware devices that are specially configured to store and perform program instructions, such as read-only memory devices (ROM) and random access memory (RAM). The invention may also be embodied in a carrier wave travelling over an appropriate medium such as airwaves, optical lines, electric lines, etc. Examples of program instructions include both machine code, such as produced by a compiler, and files containing higher level code that may be executed by the computer using an interpreter.

Although several preferred embodiments of this invention have been described in detail herein with reference to the accompanying drawings, it is to be understood that the invention is not limited to these precise embodiments, and that various changes and modifications may be effected therein by one skilled in the art without departing from the scope of spirit of the invention as defined in the appended claims.

What is claimed is:

1. A computer-Implemented method performed by at least one computing device for implementing electronic commerce transactions via a network, the method comprising:

identifying a regulated item selected by a customer, the regulated item corresponding to an item which satisfies one or more predetermined criteria, the one or more predetermined criteria indicating at least that the item is subject to one or more regulations, and the regulated item being made available from a merchant via an online store;

placing the regulated item in an electronic shopping cart associating with an order of the customer from the online store, the order also having delivery information regarding delivery of the order; and

subsequently taking action, by the at least one computing device, to remove the regulated item from the electronic shopping cart associated with the customer, the removal of the regulated item from the electronic shopping cart being based on the one or more predetermined criteria and the delivery information,

wherein the regulated item pertains to an alcohol product or a tobacco product, and wherein the at least one regulation serves to regulate the sale or delivery of at least alcohol or tobacco products.

2. A method as recited in claim **1**, wherein the delivery information includes at least a location, and

wherein said taking action comprises determining whether to remove the regulated item from the electronic shopping cart by at least comparing the location with the one or more predetermined criteria,

3. A method as recited in claim **1**, wherein at least one of the one or more predetermined criteria corresponds to at least one of the one or more regulations which restrict sales of the regulated item to persons in a particular jurisdiction.

4. A method as recited In claim **3**, wherein a jurisdiction is a state.

5. A method as recited in claim **1**, wherein the regulated item is wine.

6. A method as recited in claim **1**, wherein at least one of the one or more regulations at least restricts sales of the regulated item to persons under a predetermined age.

7. A method as recited in claim **1**, wherein the delivery information includes a day of week, and wherein at least one of the one or more regulations at least restricts the sale of the regulated item on at least one day of the week.

8. A method as recited in claim **1**, wherein at least one of the one or more regulations requires an appropriate recipient to be present to receive the delivery of the regulated item.

9. A method as recited in claim **1**, wherein at least one of the one or more regulations depends on a location associated with the customer.

10. A method as recited in claim **1**, wherein the one or more regulations are acquired from a data store associated with a server system that performs said method, and wherein the data store stores a plurality of regulation rules applicable to a plurality of different locations.

11. A method as recited in claim **1**, wherein said taking action comprises receiving a customer input requesting removal of the regulated item from the electronic shopping cart associated with the customer.

12. A method as recited in claim **1**,

wherein said placing comprises selecting a plurality of regulated items to be placed in the electronic shopping cart, and

wherein said taking action comprises:

notifying the customer that at least one of the plurality of regulated items is required to be removed from the electronic shopping cart; and

receiving, subsequent to said notifying, a customer input requesting removal of one or more of the plurality of regulated items from the electronic shopping cart associated with the customer.

13. A computer-implemented method performed by at least one computing device for facilitating online purchase of regulated products over a network, said method comprising:

(a) providing an online store for products, at least a portion of the products being regulated products;

(b) receiving at least one input from a customer with regard to the online store to create an online order for one or more of the products;

(c) requesting the customer to set delivery timing for the online order;

(d) receiving a requested delivery timing for the online order from the customer;

(e) determining, by the at least one computing device, whether the online order includes at least one regulated product;

(f) determining by the at least one computing device, when said determining (e) determines that the online order includes at least one regulated product, whether the requested delivery timing is permitted based on at least one regulation associated with the at least one regulated product, the at least one regulated product pertaining to an alcohol product or a tobacco product, and the at least one reputation serving to regulate the sale or delivery of at least alcohol or tobacco products; and

(g) producing a perceptible indication that at least the at least one regulated product is not permitted to be delivered at the requested delivery timing when said determining (f) determines that the at least one regulated product Is not permitted to be delivered at the requested delivery timing.

14. A method of claim **13**, wherein the requested delivery timing is associated with a day of week, and wherein the at least one regulation limits the sale of the at least one regulated product to only certain days of week.

15. A method of claim **13**, wherein said producing (g) of the perceptible indication comprises causing a notification to be displayed, the notification informing the customer that the requested delivery timing is denied when said determining (f) determines that the at least one regulated product is not permitted to be delivered at the requested delivery timing.

16. A method of claim **13**, wherein the at least one regulation depends on a location associated with the customer.

17. A method of claim **13**, wherein the at least one computing device is at least a part of a server system, wherein the at least one regulation is acquired from a data store associated with the server system, and wherein the data store stores a plurality of regulations that differ depending on delivery locations.

18. A computer-implemented method performed by at least one computing device for implementing electronic commerce transactions via a network, the method comprising:

identifying, by the at least one computing device, a regulated item selected by a customer, the regulated item corresponding to an item which satisfies one or more predetermined criteria, the one or more predetermined criteria indicating whether the item is prohibited from being purchased by the customer, the one or more predetermined criteria corresponding to at least one regulation which restricts delivery of the regulated item to persons in a particular location, the regulated item pertaining to an alcohol product or a tobacco product, and the at least one regulation serving to regulate deliver timing of at least alcohol or tobacco products; and

taking action, other than or in addition to presenting a notification message, by the at least one computing device to prevent the purchase of the regulated item via the network by the customer In accordance with the at least one regulation.

19. A method of claim **18**, wherein said taking action comprises modifying a display of items available for purchase by the customer, wherein the display modification includes restricting display of items which are prohibited from being purchased by the customer based upon the one or more predetermined criteria.

20. A method of claim **18**, wherein said taking action comprises taking action to prevent the customer from adding the regulated item to an electronic shopping cart associated with the customer.

21. A method of claim **18**, wherein said taking action comprises taking action to prevent the customer from completing a checkout operation with respect to an electronic shopping cart containing the regulated item.

22. A method of claim **18**, wherein the at least one computing device is at least a part of a server system, and wherein said taking action is automatically implemented at the Ran server system configured to implement electronic commerce transactions between an on-line merchant and the customer.

23. A method of claim **18**, wherein the one or more predetermined criteria correspond to one or more regulations which prohibit delivery of the regulated item to persons in a particular location or which restrict sales of the regulated item to persons under a particular age.

24. A method of claim **18**, wherein the one or more predetermined criteria Include at least one regulation code parameter for use in identifying items which are associated with a class of regulated items; and

wherein said regulated item has associated therewith a specific regulation code parameter.

25. A method of claim **18**, wherein the one or more predetermined criteria includes at least one restriction parameter for use in identifying at least one type of compliance action to be performed in order to comply with a legal regulation which restricts sales of the regulated item to persons in a particular location.

26. A computer-implemented method performed by at least one computing device for facilitating online purchase of regulated products over a network, said method comprising:

providing an online store for products, at least a portion of the products being regulated products;

receiving at least one input from a customer with regard to the online store to create an online order for one or more of the products;

requesting the customer to set a delivery location for the online order;

receiving a requested delivery location for the online order from the customer;

determining, by the at least one computing device, whether the online order includes at least one regulated product;

determining by the at least one computing device, when it is determined that the online order includes at least one regulated product, whether the requested delivery location is permitted based on at least one regulation associated with the at least one regulated product, the at least one regulated product pertaining to an alcohol product or a tobacco product, and the at least one regulation serving to regulate delivery timing of at least alcohol or tobacco products; and

producing a perceptible indication that at least the at least one regulated product is not permitted to be delivered at the requested delivery location when it is determined that the at least one regulated product is not permitted to be delivered at the requested delivery location.

27. A system for implementing electronic commerce transactions via a data network, said system comprising:

at least one CPU;

a memory; and

said system being configured to:

provide an online store for products, at least a portion of the products being regulated products;

receive interactions from a customer with regard to the online store to create an online order for one or more of the products;

request the customer to set a delivery location for the online order;

receive a requested delivery location for the online order from the customer,

determine whether the online order Includes at least one regulated product; and

determine, when it is determined that the online order includes at least one regulated product, whether the requested delivery location is permitted based on at least one regulation associated with the at least one regulated product, the at least one regulated product pertaining to an alcohol product or a tobacco product, and the at least one regulation serving to regulate delivery timing of at least alcohol or tobacco products.

28. A system of claim 27, wherein said system being further configured to;

produce a perceptible indication that at least the at least one regulated product is not permitted to be delivered at the requested delivery location when it is determined that the at least one regulated product is not permitted to be delivered at the requested delivery location.

29. A system of claim 27, wherein said system is configured to inform the customer that delivery of the at least one regulated product is restricted.

30. A system of claim 27, wherein said system is configured to inform the customer that delivery of the online order, due to at least one regulated product, is subject to at least one restriction.

31. A system of claim 28, wherein the at least one restriction prohibits delivery of the at least one regulated product at the requested delivery location.

32. A system as recited in claim 29, wherein when the at least one restriction prohibits delivery of the at least one regulated product at the requested delivery location, said system is configured to (i) remove the at least one regulated product from the online order and continue with the requested delivery location, or (ii) allow the customer to designate another delivery location.

33. A system for implementing electronic commerce transactions via a data network, said system comprising:

at least one CPU; and

a memory configured to store computer program code, said computer program code including at least:

computer program code for providing an online store for products, at least a portion of the products being regulated products;

computer program code for receiving interactions from a customer with regard to the online store to create an online order for one or more of the products;

computer program code for requesting the customer to set delivery information for the online order of the customer, the delivery information including at least delivery timing data;

computer program code for receiving the delivery information for the online order of the customer;

computer program code for determining whether the online order includes at least one regulated product;

computer program code for determining, when it is determined that the online order includes at least one regulated product, whether delivery of the online order in accordance with the delivery timing data is permitted based on at least one regulation associated with the at least one regulated product, the at least one regulated product pertaining to an alcohol product or a tobacco product, and the at least one regulation serving to regulate delivery timing of at least alcohol or tobacco products; and

computer program code for producing a perceptible indication that at least the at least one regulated product is not permitted to be delivered in accordance with the delivery timing data if it is determined that the at least one regulated product is not permitted to be delivered in accordance with the delivery information.

34. A system of claim 33, wherein the delivery information includes at least a state to which the online order is to be delivered.

35. A system of claim 33, wherein the delivery information includes at least a delivery address to which the online order is to be delivered.

36. A system of claim 33, wherein said system is configured to inform the customer that delivery of the at least one regulated product is restricted.

37. A system of claim 33, wherein said system is configured to inform the customer that delivery of the online order, due to at least one regulated product, is subject to at least one restriction.

38. A system as recited in claim 37, wherein when the at least one restriction prohibits delivery of the at least one regulated product in accordance with the delivery information, said system is configured to (i) remove the at least one regulated product from the online order and maintain the delivery information, or (ii) allow the customer to designate other delivery information.

39. A system as recited in claim 33, wherein the at least one regulation prohibits delivery of regulated products based on one or more of month of year, week of month, day of month, or calendar date.

40. A system as recited in claim 33,

wherein said computer program code for receiving interactions from the customer with regard to the online store to create the online order for one or more of the products comprises computer program code for providing an electronic shopping cart configured to identify the one or more products of the online order, and

wherein said computer program code for determining whether delivery of the online order in accordance with the delivery information is permitted operates to check those products that have been placed within the electronic shopping cart.

41. A computer-implemented method performed by at least one computing device for facilitating online purchase of regulated products over a network, said method comprising:

providing an online store for products, at least a portion of the products being regulated products;

receiving interactions from a customer with regard to the online store to identify one or more of the products for an online order;

requesting the customer to set a delivery location for the online order;

receiving a requested delivery location for the online order from the customer;

determining, by the at least one computing device, whether the online order includes at least one regulated product; and

determining, by the at least one computing device, when it is determined that the online order includes at least one regulated product, whether delivery of the online order to the requested delivery location is permitted based on at least one regulation associated with the at least one regulated product, the at least one regulated product pertaining to an alcohol product or a tobacco product, and the at least one regulation serving to regulate delivery timing of at least alcohol or tobacco products.

42. A computer-implemented method of claim **41**, wherein said method further comprises:

producing a perceptible indication that at least the at least one regulated product is not permitted to be delivered to the requested delivery location when it is determined that the at least one regulated product is not permitted to be delivered to the requested delivery location.

43. A computer-implemented method of claim **41**, wherein said method comprises:

informing the customer that delivery of the at least one regulated product is restricted, when it is determined that the at least one regulated product is not permitted to be delivered to the requested delivery location.

44. A computer-implemented method of claim **41**, wherein said method comprises:

allowing the customer to (i) remove the at least one regulated product from the online order or (ii) designate another delivery location, when it is determined that the at least one regulated product is not permitted to be delivered to the requested delivery location.

45. A computer-implemented method of claim **42**, wherein the at least one regulation prohibits delivery of regulated products based on one or more of month of year, week of month, day of month, or calendar date.

46. A computer-implemented method of claim **41**,

wherein said method comprises providing an electronic shopping cart configured to identify the one or more products of the online order, and

wherein said determining whether delivery of the online order to the requested delivery location is permitted operates to check those products that have been placed within the electronic shopping cart.

* * * * *